Contract Administration / C.P. Thomson X3246

FINAL SUBMITTAL

FY93 MCAF 5123
FIRE TRAINING FACILITY
ANDERSEN AIR FORCE BASE, GUAM

CONTRACT NO. N62766-92-C-0203

REVISIONS				
LTR	DESCRIPTION	PREP'D BY	DATE	APPROVED

ABBREVIATIONS

ALUM.	ALUMINUM	MTL.	METAL
		MM	MILLIMETERS
BLK.	BLOCK	MISC.	MISCELLANEOUS
BOT	BOTTOM		
BLDG	BUILDING	O.C.	ON CENTER
CONC.	CONCRETE	R.O.	ROUGH OPENING
CMU	CONCRETE MASONRY UNIT		
CLR.	CLEAR	STRUCT.	STRUCTURAL
℄	CENTERLINE	STL.	STEEL
		S.S.	STAINLESS STEEL
DR.	DOOR	SL.	SLOPE
		STD.	STANDARD
EXP.	EXPANSION		
ELAST.	ELASTOMERIC	THK.	THICK
		TYP.	TYPICAL
F.F.	FINISH FLOOR		
FIN.	FINISH	WDW.	WINDOW
FTG	FOOTING	W/	WITH

LOCATION MAP
NO SCALE

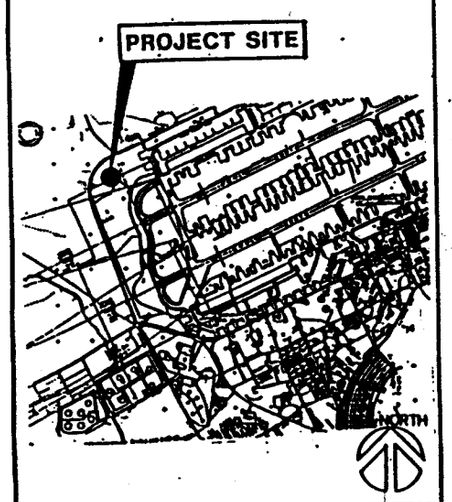

VICINITY MAP
NO SCALE

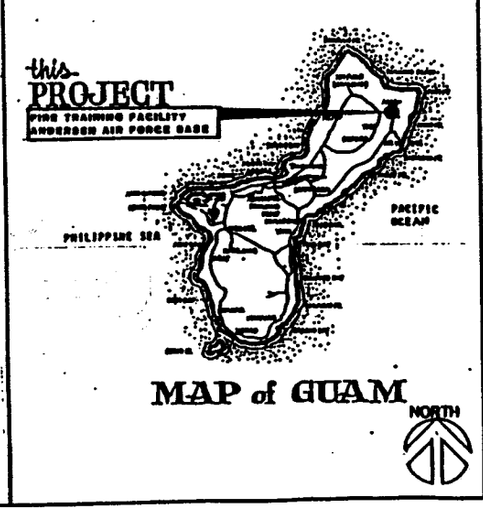

LEGEND & SYMBOLS

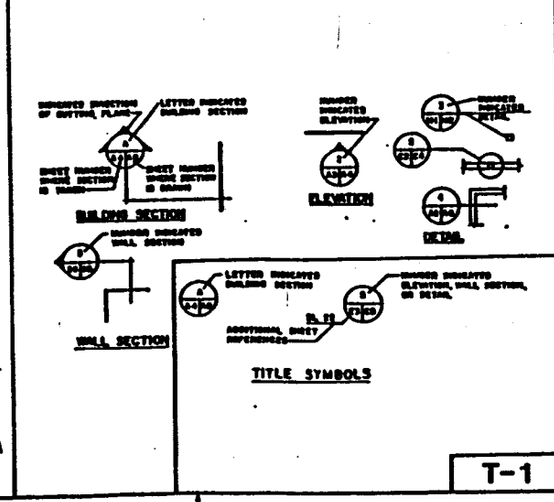

633 SUPPORT GROUP ICEC) LETTER OF 25 JUN '93 PROVIDED FUNCTIONAL APPROVAL

The Contractor will be responsible for coordinating the work among the various trades as necessary to avoid conflicts and to insure the installation of all work within the available space.

IF SHEET IS LESS THAN (24" X 36") IT IS A REDUCED PRINT — SCALE REDUCED ACCORDINGLY

PETER HO ASSOCIATES INC.
ARCHITECTS-PLANNERS-ENGINEERS
DRAWN WC CHK GH APP NR
PRESENT
APPROVED BY: 7-22-93

DEPARTMENT OF THE NAVY NAVAL FACILITIES ENGINEERING COMMAND
PACIFIC DIVISION
MAKALAPA, HAWAII
ANDERSEN AIR FORCE BASE GUAM
FY93 MCAF 5123
FIRE TRAINING FACILITY
PROJECT TITLE: LOCATION MAP, VICINITY MAP, LEGEND & SYMBOLS
REVISED DRAWING NO 7908918
D 90001
CONTRACT NO N62766-92-C-0203
SCALE
DWG 14-92-0203
SHEET 1 OF 59

T-1

INDEX TO DRAWINGS

NAVFAC NUMBER	SHEET COUNT	A/E NUMBER	DESCRIPTION OF DRAWINGS
			TITLE SHEETS
7908918	1	T-1	PROJECT TITLE, LOCATION MAP, VICINITY MAP, LEGEND & SYMBOLS
7908919	2	T-2	INDEX TO DRAWINGS
			CIVIL
7908920	3	C-1	DEMOLITION & GRADING PLAN
7908921	4	C-2	SITE & UTILITY PLAN
7908922	5	C-3	EXCAVATION PLAN & WATERLINE PROFILE
7908923	6	C-4	TRENCH SECTIONS & CONTROL AREA
7908924	7	C-5	COMPOSITE SECTION & DETAILS
7908925	8	C-6	BURN AREA SECTION & DETAILS
7908926	9	C-7	BURN AREA & TRENCH DETAILS
7908927	10	C-8	HOLDING POND & DETAILS
7908928	11	C-9	MISCELLANEOUS DETAILS
7908929	12	C-10	BORING LOGS
			ARCHITECTURAL
7908930	13	A-1	AIRCRAFT MOCK-UP DETAIL; TOP VIEW
7908931	14	A-2	AIRCRAFT MOCK-UP - VIEWS
7908932	15	A-3	CONTROL / SAFETY STAND DETAIL - PLANS, ELEVATIONS & SECTION, DR. & WDW. DETAILS
7908933	16	A-4	INTERIOR & EXTERIOR - FINISH & COLOR SCHEDULE, COLOR CODE, & MISC. DETAILS
7908934			NOT USED
7908935			NOT USED
			STRUCTURAL
7908936	17	S-1	GENERAL NOTES & TYPICAL DETAILS
7908937	18	S-2	FOUNDATION PLAN - OIL / WATER SEPARATOR
7908938	19	S-3	OIL / WATER SEPARATOR SECTION
7908939	20	S-4	OIL / WATER SEPARATOR SECTIONS
7908940	21	S-5	OIL SEPARATOR SECTION AND DETAILS
7908941	22	S-6	SKIMMER FRAME DETAILS
7908942	23	S-7	SKIMMER DETAILS
7908943	24	S-8	CONTROL / SAFETY STAND PLANS AND SECTIONS
7908944	25	S-9	PUMP PLATFORM PLAN & SECTIONS

INDEX TO DRAWINGS

NAVFAC NUMBER	SHEET COUNT	A/E NUMBER	DESCRIPTION OF DRAWINGS
7908945	26	S-10	WATER AND FUEL TANK PAD DETAILS
7908946	27	S-11	WEIR STRUCTURE PLAN & DETAILS
7908947	28	S-12	MISCELLANEOUS DETAILS
7908948	29	S-13	LPG STORAGE TANK PAD PLAN & SECTIONS
7908949	30	S-14	AIRCRAFT MOCK-UP FRAMING PLAN
7908950	31	S-15	AIRCRAFT MOCK-UP DETAILS
7908951	32	S-16	AIRCRAFT MOCK-UP DETAILS
7908952			NOT USED
7908953			NOT USED
			MECHANICAL
7908954	33	M-1	MECHANICAL SITE PLAN, HOLDING POND SECTION, LEGEND, MECHANICAL GENERAL NOTES
7908955	34	M-2	PARTIAL MECHANICAL PLANS, CONTROL TOWER SECTION, PUMP SCHEDULE
7908956	35	M-3	BURN PIT MECHANICAL PLAN, MECHANICAL SCHEMATIC SYSTEM DIAGRAM
7908957	36	M-4	MECHANICAL FUEL AREA SECTIONS AND DETAILS
7908958	37	M-5	BURN PIT PIPING SUPPORT DETAILS, FUEL OUTLET DETAILS
7908959	38	M-6	PROPANE LEGEND, PROPANE TANK SCHEDULE, LPG DISTRIBUTION PLAN
7908960	39	M-7	PROPANE ISOMETRIC PIPING DIAGRAM, GUARD POST DETAIL
7908961	40	M-8	PROPANE TANK DETAILS
7908962	41	M-9	HIGH CAPACITY TRUCK UNLOADING STATION KIT DETAIL, PNEUMATIC CONTROL SYSTEM
7908963	42	M-10	PROPANE AND POOL FIRE BURNER DETAILS
7908964	43	M-11	HIGH LEVEL ALARM / TANK GUAGE DIAGRAM, MISC. DETAILS
7908965			NOT USED
7908966			NOT USED
7908967			NOT USED
7908968	44	AM-1	MOCK-UP PIPING PLAN, MOCK-UP SECTION, PROPANE EQUIPMENT SCHEDULE
7908969	45	AM-2	MOCK-UP WING ENGINE SECTIONS
7908970	46	AM-3	MISC. DETAILS
7908971			NOT USED
7908972			NOT USED
7908973			NOT USED

INDEX TO DRAWINGS

NAVFAC NUMBER	SHEET COUNT	A/E NUMBER	DESCRIPTION OF DRAWINGS
			TITLE SHEETS
7908974	47	E-1	ELECTRICAL SITE PLAN, ELECTRICAL LEGEND, GENERAL NOTES
7908975	48	E-2	PARTIAL ELECTRICAL PLAN
7908976	49	E-3	ELECTRICAL IGNITION PLAN
7908977	50	E-4	PARTIAL ELECTRICAL PLAN
7908978	51	E-5	CATHODIC PROTECTION NOTES AND DETAILS
7908979	52	E-6	ONE-LINE DIAGRAM
7908980	53	E-7	CONTROL DIAGRAMS, SEQUENCE OF OPERATIONS
7908981	54	E-8	DETAILS
7908982	55	E-9	ELECTRICAL DETAILS - XFMR, DUCT, STATIC GROUND
7908983	56	E-10	ELECTRICAL DETAILS - MANHOLE
7908984	57	E-11	DETAILS
7908985	58	E-12	ELECTRICAL DETAILS - HANDHOLE
7908986	59	E-13	LIGHTING FIXTURE SCHEDULE AND DETAILS
7908987			NOT USED

REVISIONS

LTR	DESCRIPTION	PREPD BY	DATE	APPROVED

The Contractor will be responsible for coordinating the work among the various trades as necessary to avoid conflicts and to insure the installation of all work within the available space.

IF SHEET IS LESS THAN (22" X 34") IT IS A REDUCED PRINT - SCALE REMARKS ACCORDINGLY

PETER H. T. YEE REGISTERED PROFESSIONAL ARCHITECT HONOLULU, U.S.A.

PETER HIN ASSOCIATES, INC. ARCHITECTS PLANNERS ENGINEERS

DRAWN WC | CHK ESM | APP NR

SUPV WC | APP PH

SUBMITTED BY PRESIDENT

DEPARTMENT OF THE NAVY NAVAL FACILITIES ENGINEERING COMMAND PACIFIC DIVISION MAKALAPA, HAWAII

FY90 MCAF 0683

FIRE TRAINING FACILITY

INDEX TO DRAWINGS

REV 0 | CODE IDENT NO 80091 | DRAWING NO 7908919

CONTR CONTR NO N62766-92-C-0203

SCALE | SPEC 41-92-0203 | SHEET 2 OF 59

T-2

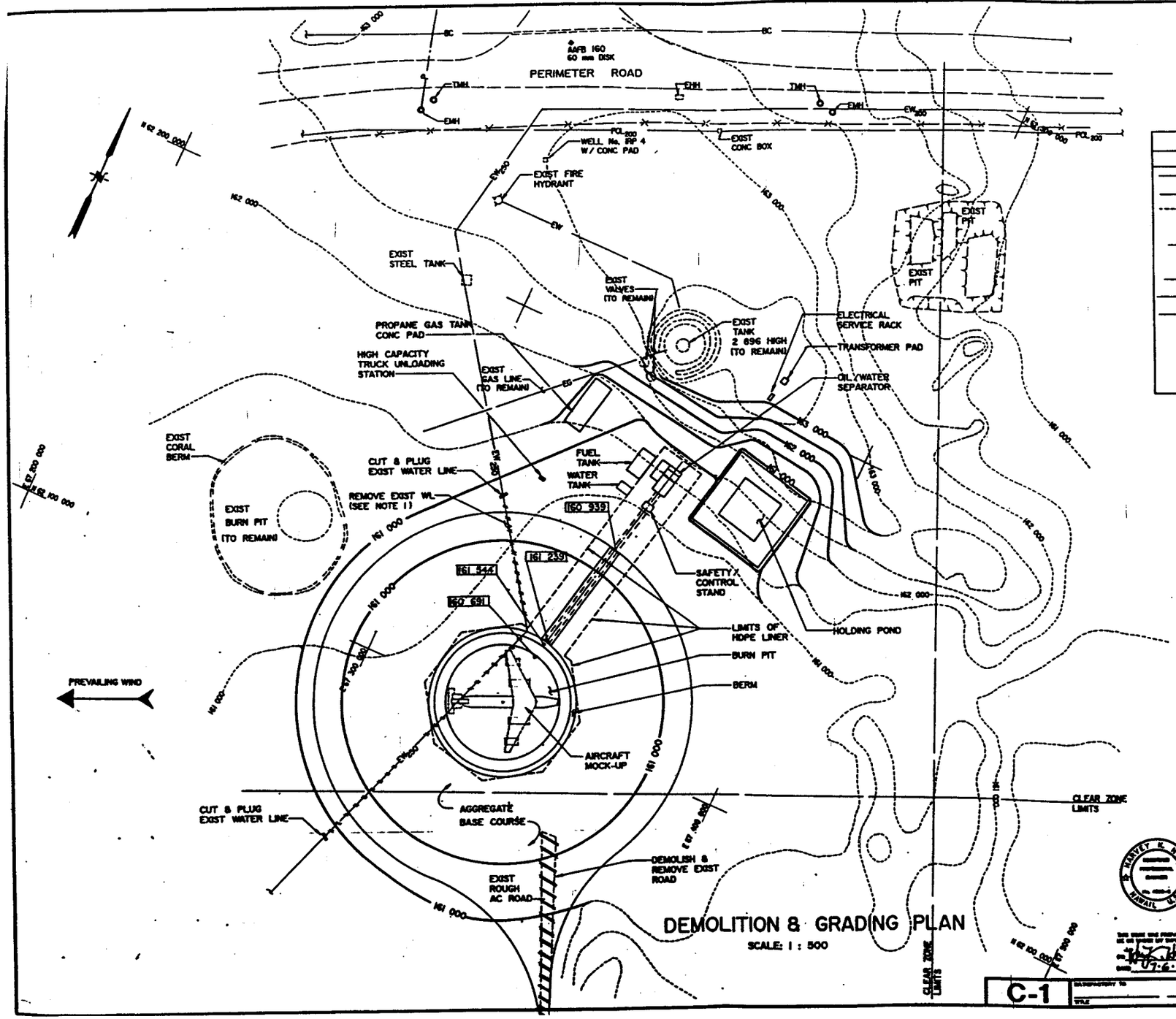

DEMOLITION & GRADING PLAN

SCALE: 1 : 500

REVISIONS				
LTR	DESCRIPTION	PREPD BY	DATE	APPROVED

LEGEND

EXISTING	DESCRIPTION	NEW
EW 250	WATER LINE	W 250
EG	GAS LINE	
102 000	CONTOUR	102 000
	SPOT GRADE	162 000
	FIRE HYDRANT	
	GATE VALVE & VALVE BOX	
P	UNDER GROUND POWER LINE	
POL	UNDER GROUND FUEL LINE	
BC	BURIED CABLE	
EHH	ELECTRIC HAND HOLE	
TMH	TELEPHONE MANHOLE	
EMH	ELECTRICAL MANHOLE	
	BORING LOG	

CIVIL ABBREVIATIONS

AC	ASPHALTIC CONCRETE
CONC	CONCRETE
CONT.	CONTINUOUS
EXIST.	EXISTING
HDPE	HIGH DENSITY POLYETHYLENE
mm	MILLIMETER
WL	WATER LINE

NOTES :

1. WATER LINE TO BE ACTIVE AT ALL TIMES.
2. FOR EXCAVATION PLAN, SEE SHEET C-3.
3. REFER TO NOTES 2 & 3 ON SHEET C-2 FOR HORIZONTAL & VERTICAL REFERENCE CONTROLS.
4. EXISTING BURN PIT, FUEL LINE AND FUEL TANK ARE TO REMAIN AND NOT BE DISTURBED.

1:500 — 10000 0 20000 40000 60000

ALL DIMENSIONS ARE IN MILLIMETERS (mm) UNLESS OTHERWISE NOTED.

The Contractor will be responsible for coordinating the work among the various trades as necessary to avoid conflicts and to insure the installation of all work within the available space.

IF SHEET IS LESS THAN (22" X 34") IT IS A REDUCED PRINT — SCALE REDUCED ACCORDINGLY

HARVEY E. MILES HAWAII U.E.A.

RMS 101 ASSOCIATES, INC.
ARCHITECTS ENGINEERS
HONOLULU, HAWAII

DEPARTMENT OF THE NAVY NAVAL FACILITIES ENGINEERING COMMAND
PACIFIC DIVISION
MAKALAPA, HAWAII

ANDERSEN AIR FORCE BASE GUAM
FY93 MCAF 8123
FIRE TRAINING FACILITY

DEMOLITION & GRADING PLAN

SIZE D | CODE IDENT NO 80091 | DRAWING NO 7906920
CONTRACT NO N62766-92-C-0203
SCALE AS SHOWN | SPEC 41-92-0203 | SHEET 3 OF 29

C-1

SUBMITTED TO DATE
TITLE

07-6-93

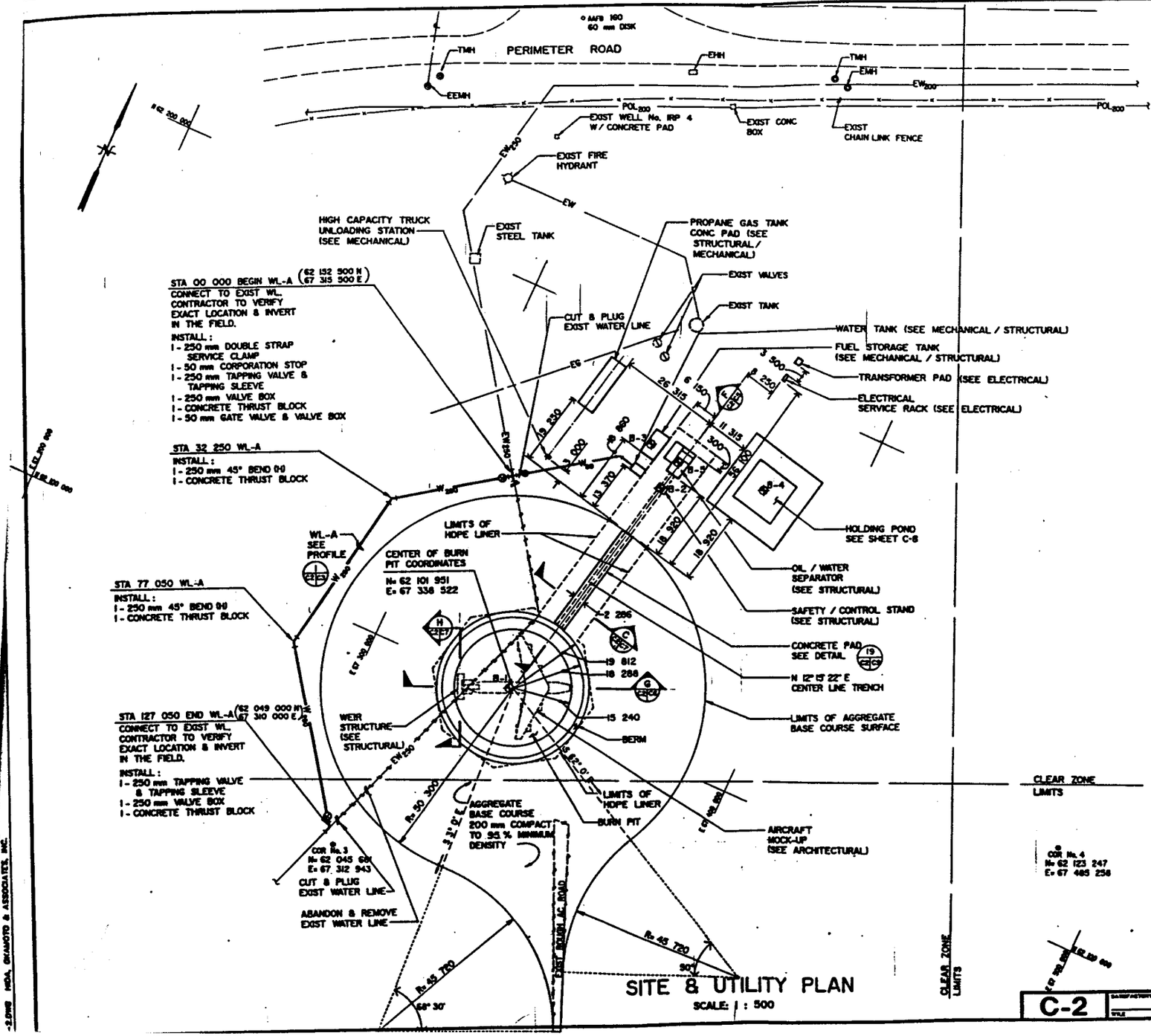

REVISIONS				
LTR	DESCRIPTION	PREPD BY	DATE	APPROVED

NOTES:

1. LOCATION OF UTILITIES BASED ON TONER OBSERVATIONS AND SHOULD BE VERIFIED BY THE CONTRACTOR.
2. VERTICAL CONTROL WAS BASED ON STA. AAFB 160 ELEV. = 162 770.
3. HORIZONTAL CONTROL WAS BASED ON STA. AAFB 160 & AAFB 187 WITH THE FOLLOWING COORDINATES:

	NORTH	EAST
AAFB 160 / 60 mm DISK	62 269 106	67 283 183
AAFB 187 / 40 mm SHELL CASING	62 882 243	68 671 184

4. FOR BORING LOGS, SEE SHEET C-10

GENERAL NOTES:

1. SEE SPECIFICATIONS FOR BACKFILL MATERIAL REQUIREMENTS.
2. SEE MECHANICAL FOR PIPE MATERIALS.
3. FINAL GRADES SHALL BE +/- 15 MM OF ELEVATIONS SHOWN.
4. LINER AND DRAINAGE NET SHALL BE LAYED OUT AND INSTALLED SUCH THAT SURFACE IRREGULARITIES WILL NOT IMPEDE DRAINAGE ACROSS SURFACE. LINER SHALL BE LAYED OUT LOOSELY, NOT TIGHTLY STRETCHED.
5. DRAWING SHOWING LINER LAYOUT AND JOINT DETAILS SHALL BE SUBMITTED BY SELLER FOR APPROVAL PRIOR TO INSTALLATION.
6. SEE STRUCTURAL DRAWINGS FOR CONCRETE AND REINFORCING REQUIREMENTS. RADIUS CORNERS OF ALL PADS A MINIMUM OF 25 MM WHEN IN CONTACT WITH HDPE LINER.
7. WHERE HDPE LINER IS IN CONTACT WITH SOIL MATERIAL, A MIN. OF 6" OF SAND SHALL BE PLACED BETWEEN SOIL MATERIAL AND LINER.
8. AFTER LINER IS IN PLACE CONTRACTOR SHALL SANDBAG OUTLET AND FILL LINED AREA WITH WATER TO TEST FOR LEAKS. CONTRACTOR SHALL ALSO TEST ALL OTHER LINED AREAS PRIOR TO PLACEMENT OF BACKFILL OR AGGREGATE. TEST SHALL BE MADE ON ALL LINER AREAS AFTER PLACEMENT OF BACKFILLS AND/OR AGGREGATE MATERIALS.
9. ANY BACKFILL PLACED UNDER LINER AREA SHALL BE COMPACTED TO 90% MAXIMUM DENSITY.
10. 1 2438 MM WIDE CLAY DIKE IS TO BE ESTABLISHED BETWEEN THE FIRE BURN AREA AND TRENCH MOUTH.
11. ALL DOUBLE EDGES OF LINER SHALL BE WELDED TOGETHER. THIS IS TO INSURE THAT NO MOISTURE CAN ENTER INTO THE NET AREA EXCEPT FROM A PUNCTURE IN THE LINER SYSTEM.

UTILITY NOTES:

1. FOR CONC THRUST BLOCKS, SEE DETAIL 17/C-5
2. FOR TRENCH, SEE DETAIL 18/C-5
3. FOR CONTROL AREA, SEE DETAIL 1/C-4
4. FOR TAPPING VALVE & VALVE BOX ASSEMBLY, SEE DETAIL 21/C-5

ALL DIMENSIONS ARE MILLIMETERS (mm) UNLESS OTHERWISE NOTED.

1:500 — 10000 0 20000 40000 60000

The Contractor will be responsible for coordinating the work among the various trades as necessary to avoid conflicts and to insure the installation of all work within the available space.

IF SHEET IS LESS THAN (22" X 34") IT IS A REDUCED PRINT — SCALE REDUCED ACCORDINGLY

HARVEY K. HIRA
HAWAII, U.S.A.

PETER HIRA ASSOCIATES, INC.
ARCHITECTS PLANNERS ENGINEERS
ELECTRICAL MECHANICAL

DEPARTMENT OF THE NAVY NAVAL FACILITIES ENGINEERING COMMAND
PACIFIC DIVISION
MAKALAPA, HAWAII

ANDERSEN AIR FORCE BASE GUAM

FY93 MCAF 8123
FIRE TRAINING FACILITY

SITE & UTILITY PLAN

CODE D | CODE IDENT NO 80091 | DRAWING NO 7908921

CONTR IDENT NO N62766-92-C-0203

SCALE AS SHOWN | SPEC 41-92-0203 | SHEET 4 OF 59

C-2

HIRA, OKAMOTO & ASSOCIATES, INC.

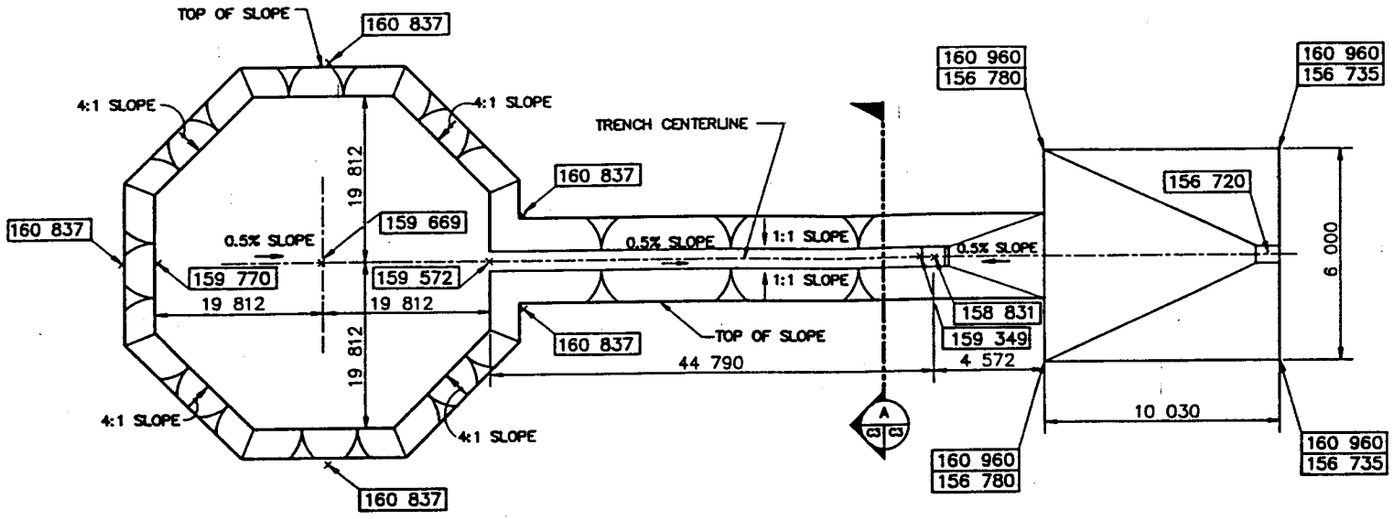

EXCAVATION PLAN

NO SCALE

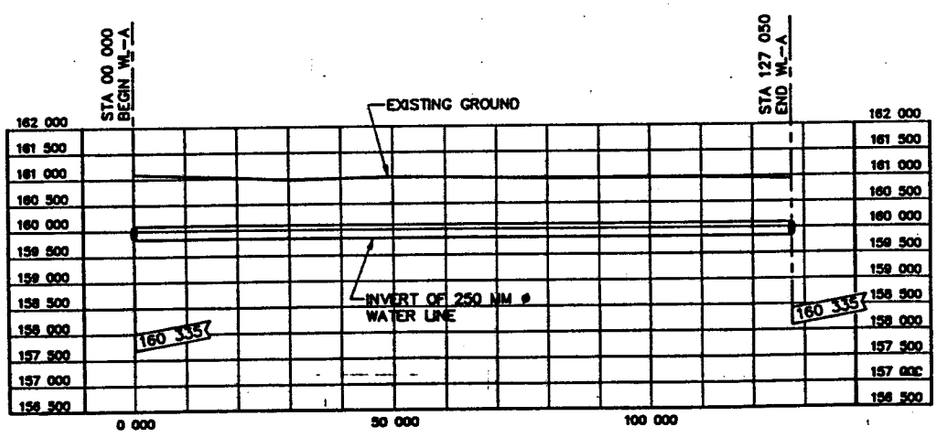

WATER LINE "A"

1 C2 C3 PROFILE

SCALE: HORIZONTAL 1 : 50
VERTICAL 1 : 500

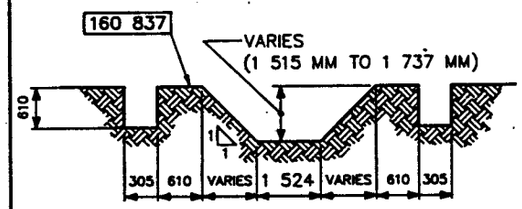

TRENCH

A C3 C3 SECTION

NO SCALE

ALL DIMENSIONS ARE IN MILLIMETERS (mm) UNLESS OTHERWISE NOTED.

The Contractor will be responsible for coordinating the work among the various trades as necessary to avoid conflicts and to insure the installation of all work within the available space.

IF SHEET IS LESS THAN (22" X 34") IT IS A REDUCED PRINT – SCALE REDUCED ACCORDINGLY

HARVEY K. HIDA
HAWAII, U.S.A.

PETER HIN ASSOCIATES, INC.
ARCHITECTS PLANNING ENGINEERS

DEPARTMENT OF THE NAVY NAVAL FACILITIES ENGINEERING COMMAND
PACIFIC DIVISION
MAKALAPA, HAWAII

ANDERSEN AIR FORCE BASE GUAM
FY93 MCAF 8123
FIRE TRAINING FACILITY
EXCAVATION PLAN & WATER LINE PROFILE

D | 80091 | 7908922
N62766-92-C-0203
41-92-0203 | SHEET 5 OF 59

C-3

NOTE:
ALL DIMENSIONS ARE MILLIMETERS (mm) UNLESS OTHERWISE NOTED.

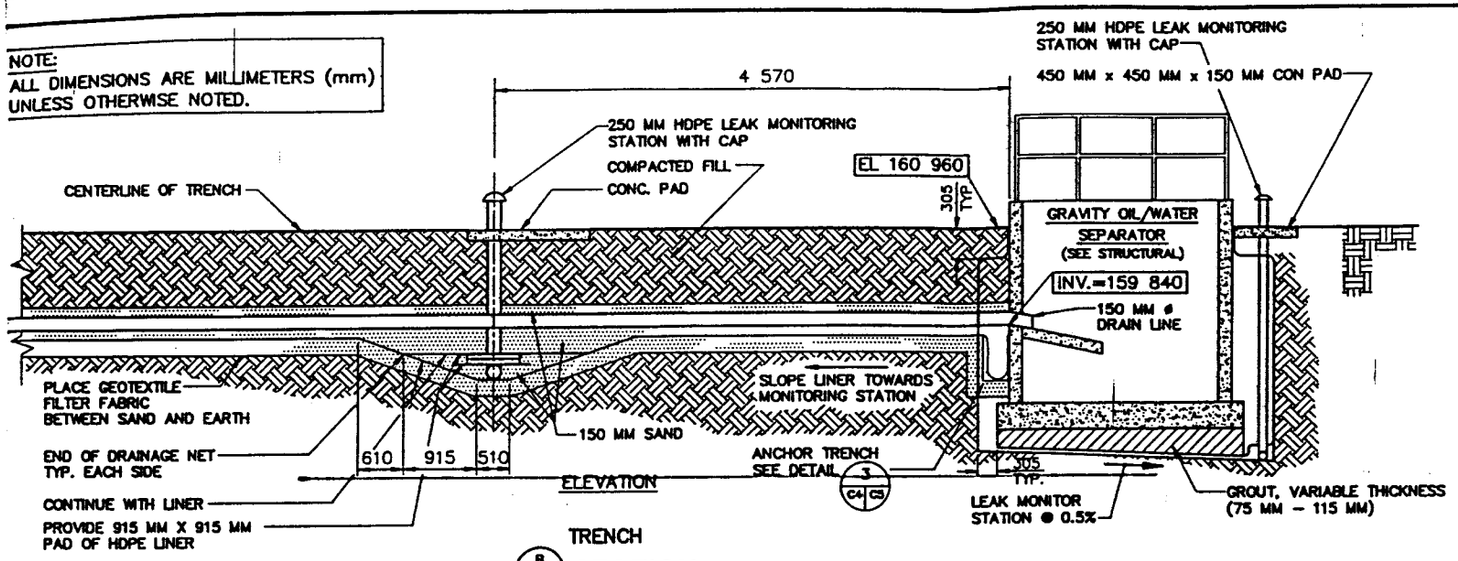

TRENCH
B C4/C4 SECTION
NO SCALE

REVISIONS				
LTR	DESCRIPTION	PREPD BY	DATE	APPROVED

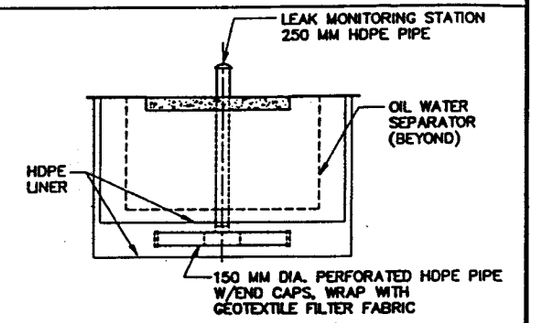

LEAK MONITORING STATION/AREA
E C4/C4 SECTION
NO SCALE

NOTE:
FOR LOCATION OF PROPANE FUEL LINES REFER TO DETAIL C C4/C7

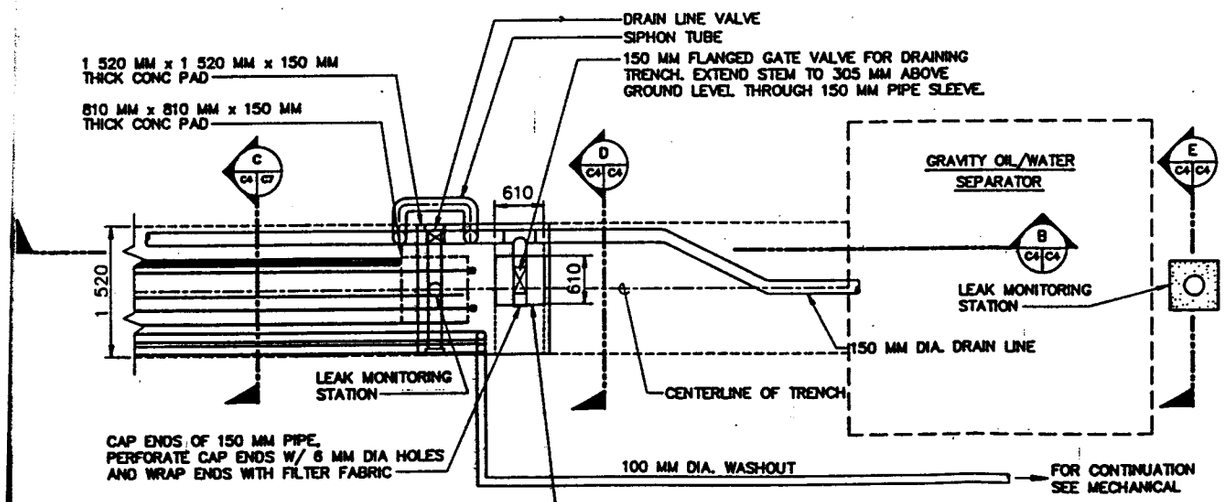

PLAN
CONTROL AREA
1 C2/C4 DETAIL
NO SCALE

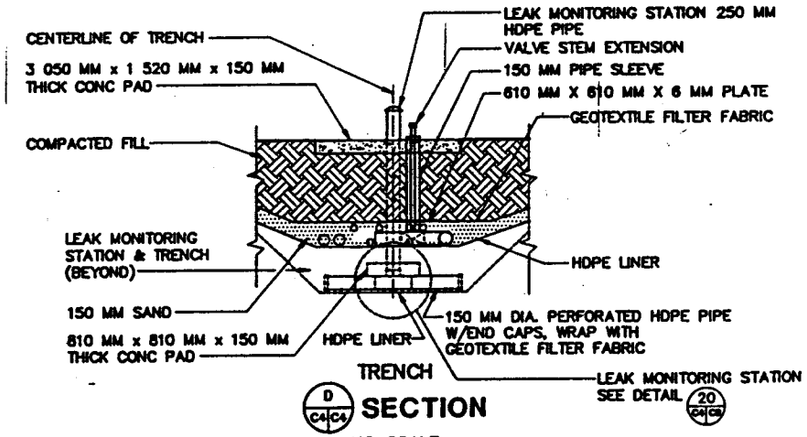

TRENCH
D C4/C4 SECTION
NO SCALE

The Contractor will be responsible for coordinating the work among the various trades as necessary to avoid conflicts and to insure the installation of all work within the available space.

IF SHEET IS LESS THAN (22" x 34") IT IS A REDUCED PRINT – SCALE REDUCED ACCORDINGLY

HARVEY K. HIDA PROFESSIONAL ENGINEER HAWAII U.S.A.

PETER HIRI ASSOCIATES, INC. ARCHITECTS PLANNERS ENGINEERS

DEPARTMENT OF THE NAVY NAVAL FACILITIES ENGINEERING COMMAND
PACIFIC DIVISION
MAKALAPA, HAWAII

ANDERSEN AIR FORCE BASE GUAM
FY93 MCAF 5123
FIRE TRAINING FACILITY
TRENCH SECTIONS & CONTROL AREA

SIZE D | CODE IDENT NO 80091 | DRAWING NO 7908923
SCALE AS SHOWN | SPEC 41-92-0203 | SHEET 6 OF 59

C-4

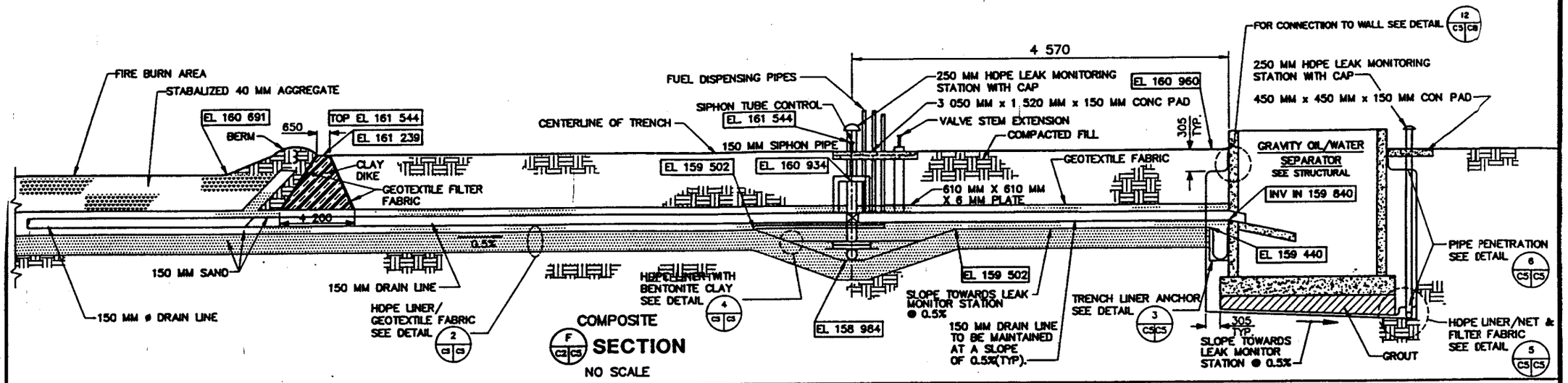

COMPOSITE SECTION F C2 C5

NO SCALE

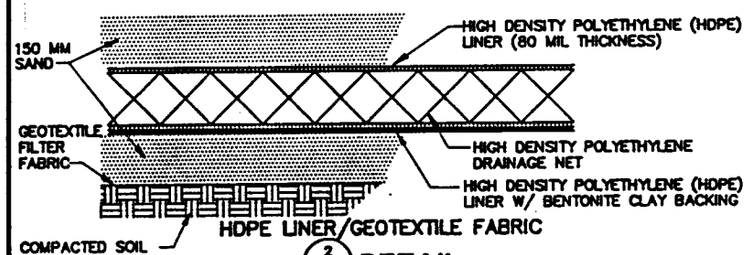

HDPE LINER/GEOTEXTILE FABRIC

2 C5 C5 DETAIL

NO SCALE

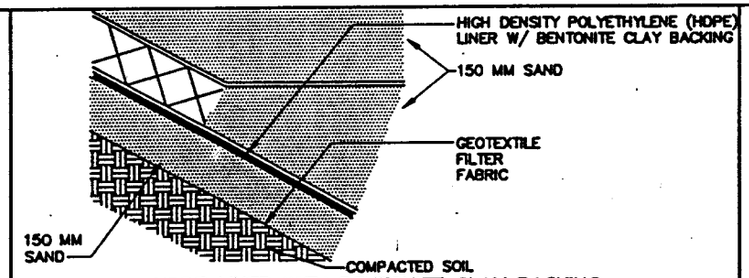

HDPE LINER WITH BENTONITE CLAY BACKING

4 C5 C5 DETAIL

NO SCALE

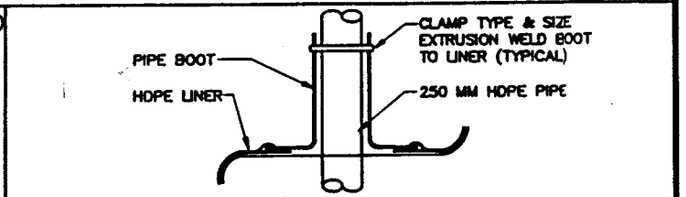

PIPE PENETRATION

6 C5 C5 DETAIL

NO SCALE

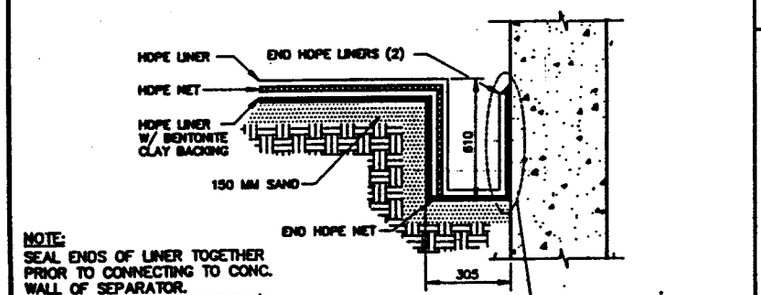

NOTE:
SEAL ENDS OF LINER TOGETHER PRIOR TO CONNECTING TO CONC. WALL OF SEPARATOR.
SLOPE LINER TOWARDS MONITORING STATION @ 0.5% (MIN.).

TRENCH LINER ANCHOR

3 C5 C5 DETAIL

C4

NO SCALE

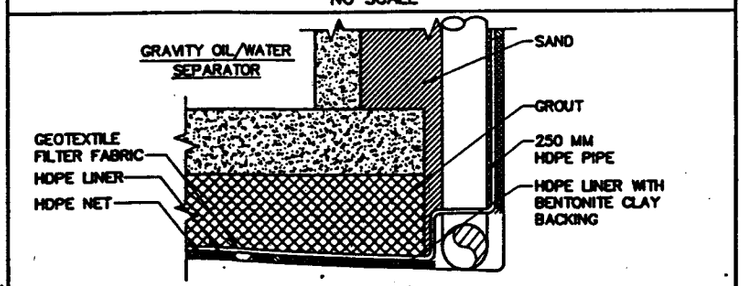

HDPE LINE/NET & FILTER FABRIC

5 C5 C5 DETAIL

NO SCALE

NOTE:
ALL DIMENSIONS ARE MILLIMETERS (mm) UNLESS OTHERWISE NOTED.

The Contractor will be responsible for coordinating the work among the various trades as necessary to avoid conflicts and to insure the installation of all work within the available space.

IF SHEET IS LESS THAN (22" X 34") IT IS A REDUCED PRINT – SCALE REDUCED ACCORDINGLY

MARVEY E. NIDA HAWAII, U.S.A.

DEPARTMENT OF THE NAVY NAVAL FACILITIES ENGINEERING COMMAND
PACIFIC DIVISION
MAKALAPA, HAWAII

ANDERSEN AIR FORCE BASE GUAM

FY93 MCAF 8123
FIRE TRAINING FACILITY
COMPOSITE SECTION & DETAILS

SIZE	CODE IDENT NO	DRAWING NO
D	80091	7908924

CONTR DWG NO N62786-92-C-0203

SCALE AS SHOWN SPEC 41-92-0203 SHEET 7 OF 59

C-5

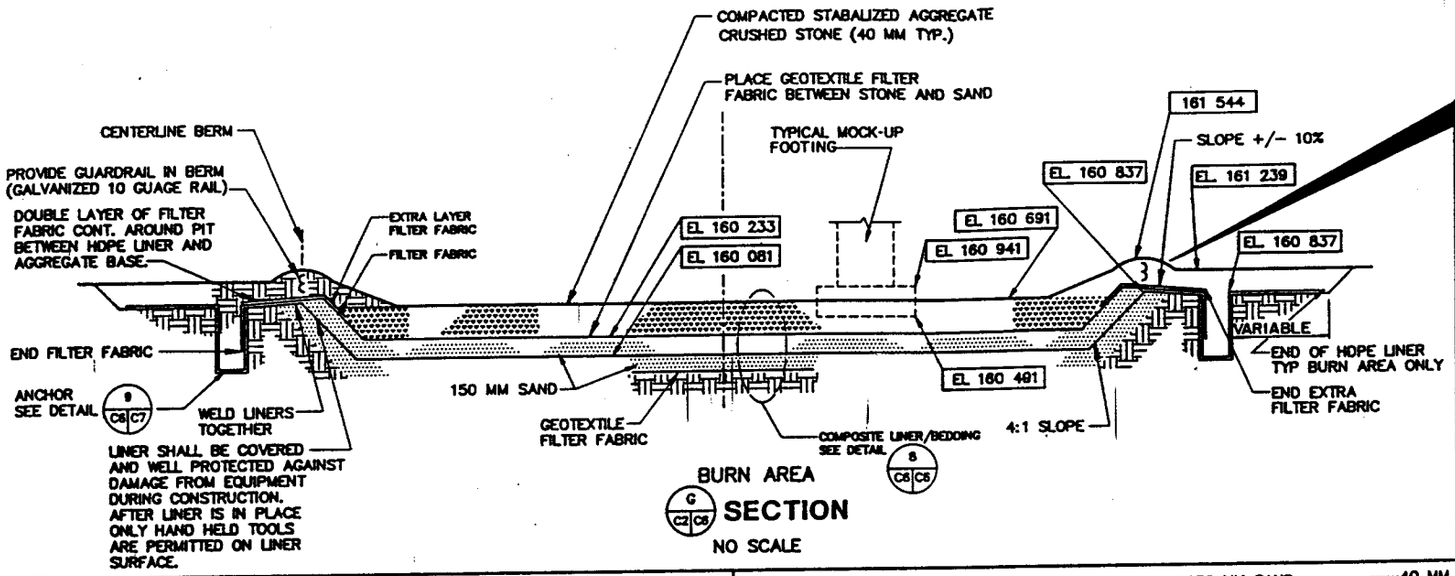

BURN AREA
G C2 C6 SECTION
NO SCALE

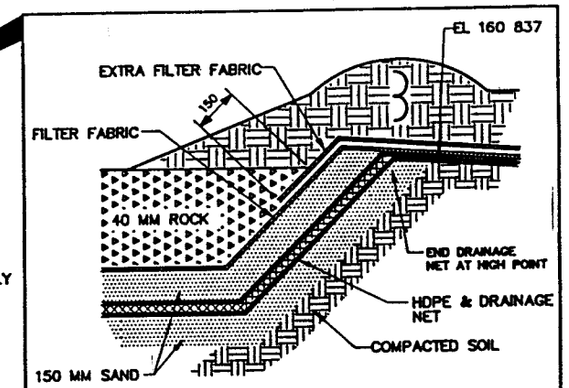

NOTE: TYPICAL ALL AROUND BURN AREA.

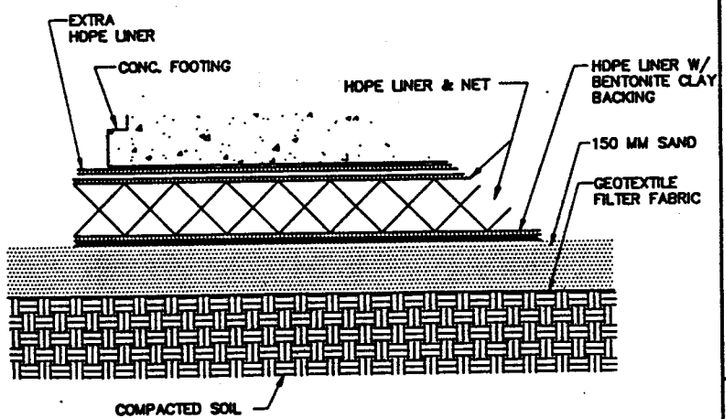

BELOW WEIR STRUCTURE FOOTING
7 C7 C6 DETAIL
NO SCALE

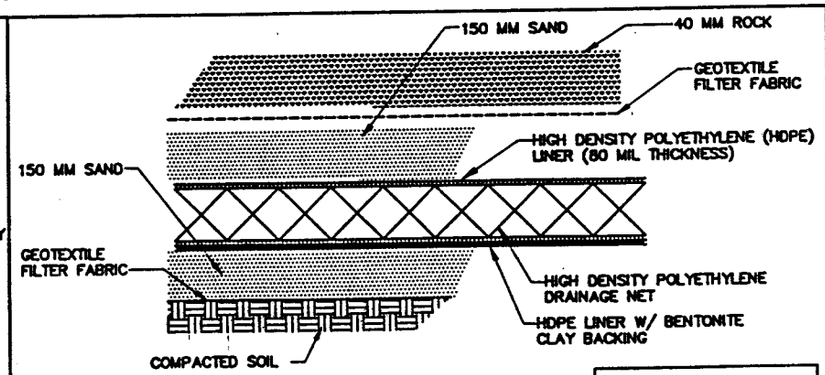

COMPOSITE LINER/BEDDING
8 C6 C6 DETAIL
NO SCALE

NOTE:
LINER SHALL ALWAYS SLOPE TOWARDS MONITORING STATION AT A MIN. GRADE OF 0.5%.

NOTE:
ALL DIMENSIONS ARE MILLIMETERS (mm) UNLESS OTHERWISE NOTED.

The Contractor will be responsible for coordinating the work among the various trades as necessary to avoid conflicts and to insure the installation of all work within the available space.

IF SHEET IS LESS THAN (22" X 34") IT IS A REDUCED PRINT – SCALE REDUCED ACCORDINGLY

HARVEY K. NIDA HAWAII U.S.A.

PETER HIN ASSOCIATES, INC.

DEPARTMENT OF THE NAVY NAVAL FACILITIES ENGINEERING COMMAND
PACIFIC DIVISION
MAKALAPA, HAWAII

ANDERSEN AIR FORCE BASE GUAM
FY93 MCAF 5123
FIRE TRAINING FACILITY
BURN AREA SECTION & DETAILS

D | 80081 | 7908925
N62766-92-C-0203
41-92-0203 | SHEET 8 OF 59

C-6

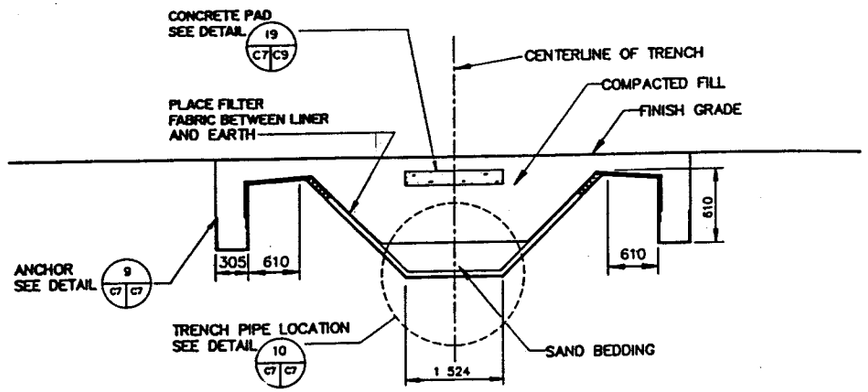

TRENCH
C4 C2 C7 SECTION
NO SCALE

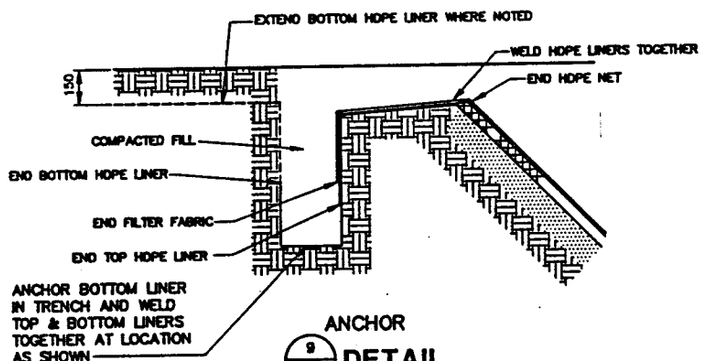

ANCHOR
C6, C8 9 C7 C7 DETAIL
NO SCALE

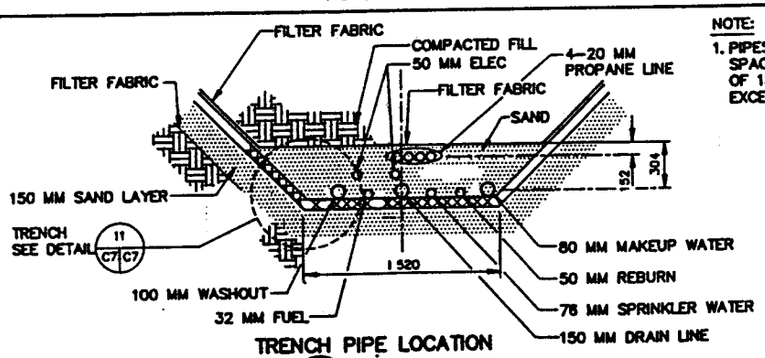

TRENCH PIPE LOCATION
C7 10 C4 C7 DETAIL
NO SCALE

NOTE:
1. PIPES SHALL BE SPACED A MINIMUM OF 150 MM APART EXCEPT AS NOTED.

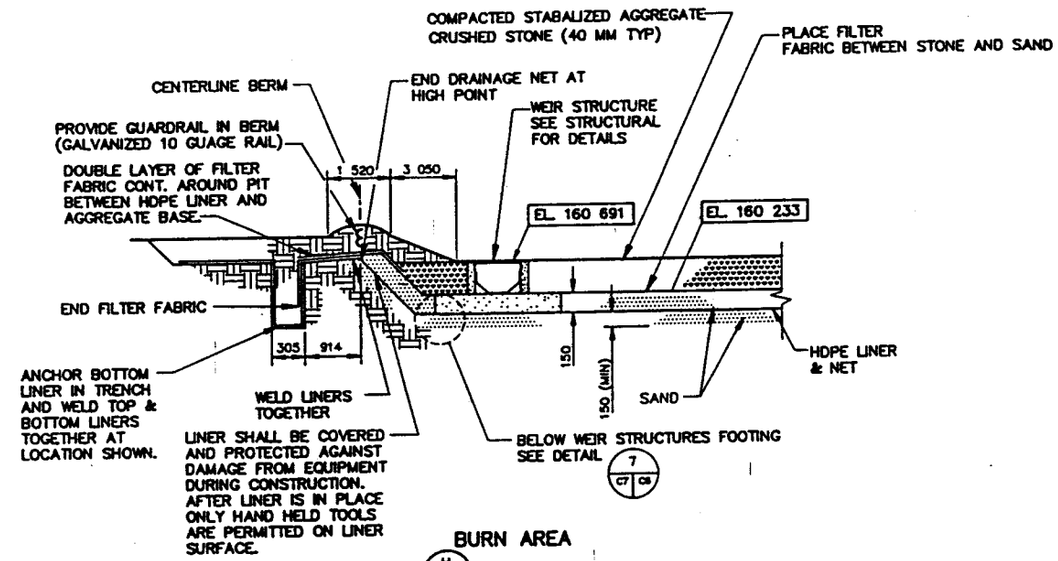

BURN AREA
H C2 C7 SECTION
NO SCALE

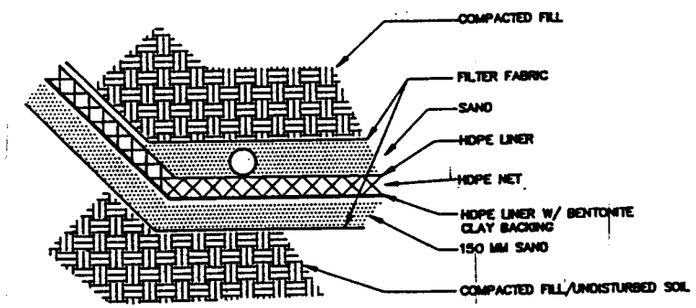

TRENCH
C7 11 C6 C7 DETAIL
NO SCALE

ALL DIMENSIONS ARE MILLIMETERS (mm) UNLESS OTHERWISE NOTED

REVISIONS

LTR	DESCRIPTION	PREPD BY	DATE	APPROVED

The Contractor will be responsible for coordinating the work among the various trades as necessary to avoid conflicts and to insure the installation of all work within the available space.

IF SHEET IS LESS THAN (22" X 34") IT IS A REDUCED PRINT – SCALE REDUCED ACCORDINGLY

HARVEY K. HIDA
HAWAII U.S.A.

PETER HIN ASSOCIATES, INC.
ARCHITECTS PLANNING ENGINEERS

DEPARTMENT OF THE NAVY NAVAL FACILITIES ENGINEERING COMMAND
PACIFIC DIVISION
MAKALAPA, HAWAII

ANDERSEN AIR FORCE BASE GUAM
FY93 MCAF 5123
FIRE TRAINING FACILITY
BURN AREA & TRENCH DETAILS

SIZE D | CODE IDENT NO 80091 | NAVFAC DRAWING NO 7908926
CONTR DRWG NO N62766-92-C-0203
SCALE AS SHOWN | SPEC 41-92-0203 | SHEET 9 OF 59

C-7

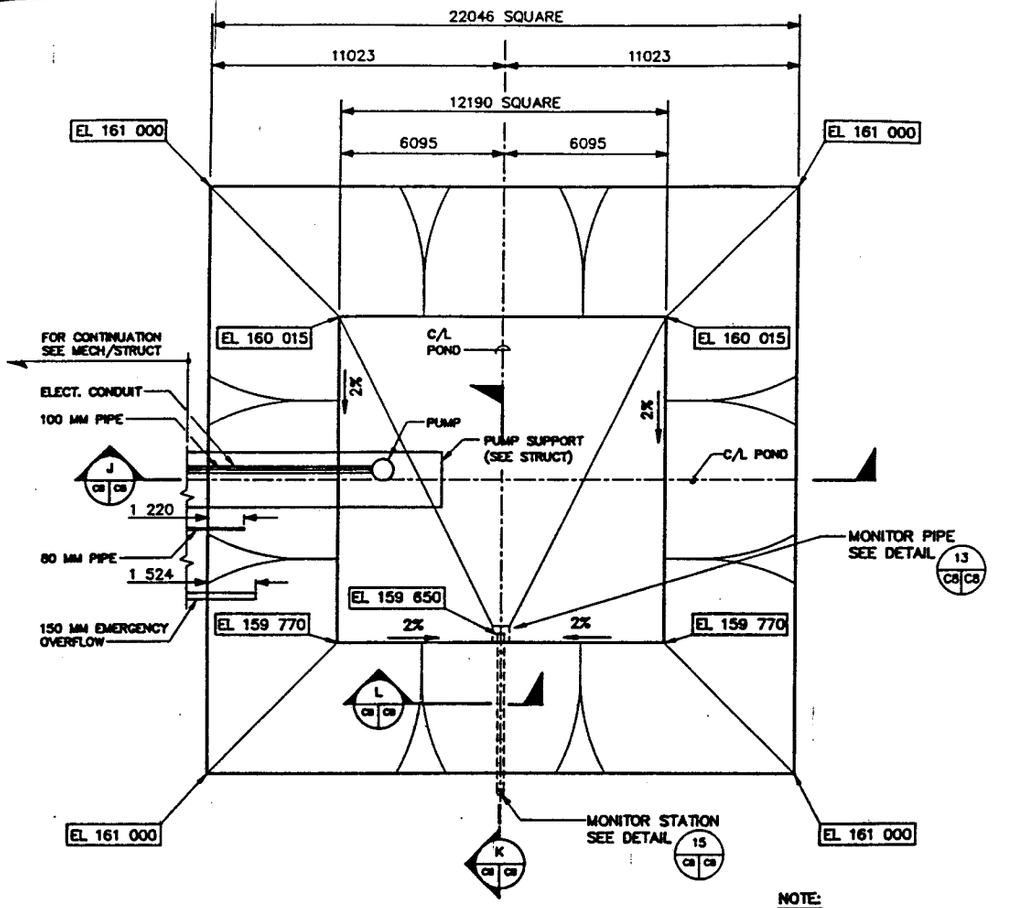

HOLDING POND
NO SCALE

NOTE:
80 MM & 100 MM PIPES ARE TO BE PLACED ABOVE GROUND. (SEE MECHNICAL)

E:
PIPES SHALL BE ABOVE
IND EXCEPT AS NOTED.

OPERATING LIMITS OF HOLDING POND:
- NORMAL DEPTH UP TO 680 MM
- MINIMUM FREEBOARD 305 MM

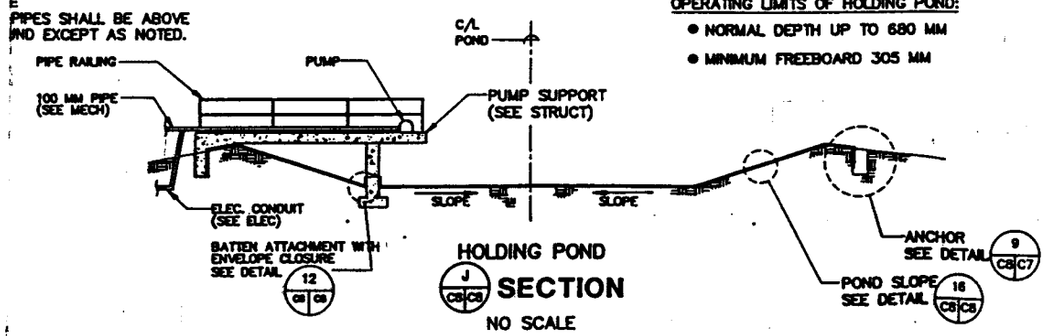

HOLDING POND
J C8 C8 **SECTION**
NO SCALE

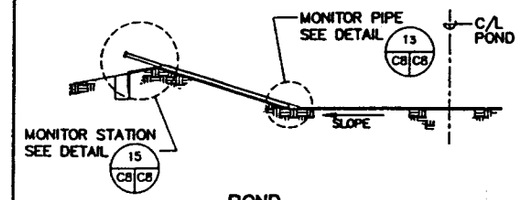

POND
K C8 C8 **SECTION**
NO SCALE

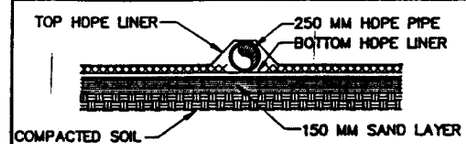

MONITOR PIPE
L C8 C8 **SECTION**
NO SCALE

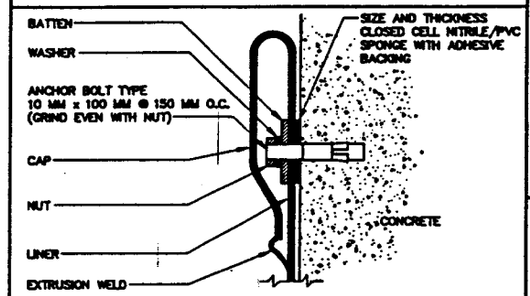

BATTEN ATTACHMENT WITH ENVELOPE CLOSURE
C5 12 C8 C8 **DETAIL**
NO SCALE

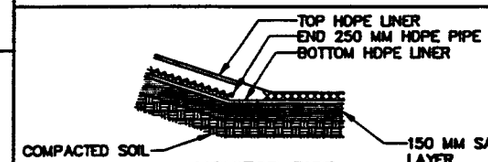

MONITOR PIPE
13 C8 C8 **DETAIL**
NO SCALE

NOTE:
ALL DIMENSIONS ARE MILLIMETERS (mm) UNLESS OTHERWISE NOTED.

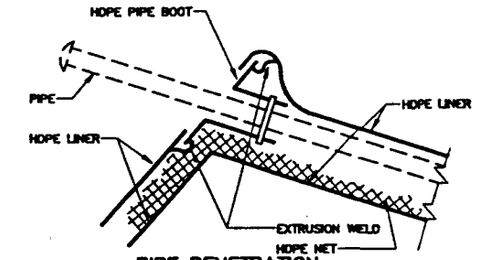

PIPE PENETRATION
14 C8 C8 **DETAIL**
NO SCALE

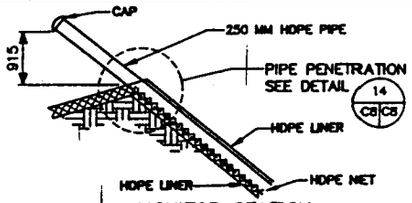

MONITOR STATION
15 C8 C8 **DETAIL**
NO SCALE

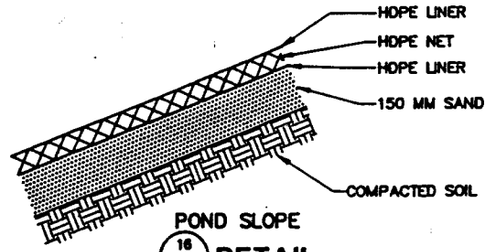

POND SLOPE
16 C8 C8 **DETAIL**
NO SCALE

REVISIONS				
LTR	DESCRIPTION	PREPD BY	DATE	APPROVED

The Contractor will be responsible for coordinating the work among the various trades as necessary to avoid conflicts and to insure the installation of all work within the available space.

IF SHEET IS LESS THAN (22" X 34") IT IS A REDUCED PRINT -- SCALE REDUCED ACCORDINGLY

PETER HIN ASSOCIATES, INC. ARCHITECT PLANNERS ENGINEERS
SUITE 1000, 1132 BISHOP STREET, HONOLULU, HAWAII 96813

DEPARTMENT OF THE NAVY NAVAL FACILITIES ENGINEERING COMMAND
PACIFIC DIVISION
MAKALAPA, HAWAII

ANDERSEN AIR FORCE BASE GUAM
FY93 MCAF #123
FIRE TRAINING FACILITY
HOLDING POND & DETAILS

SIZE D | CODE IDENT NO 80091 | MASTER DRAWING NO 7908927
CONTR CONTR NO N62766-92-C-0203
SCALE AS SHOWN | SPEC 41-92-0203 | SHEET 10 OF 59

C-8

DATE/ACCEPT TO | DATE | TITLE

TYPE OF SOIL CONDITION	LATERAL BEARING PRESSURE
A. SOFT CLAY; FINE LOOSE SAND	23.4 KPa
B. SAND & CLAY, MIXED OR IN LAYERS; FINE CONFINED SAND	47.9
C. HARD DRY CLAY	71.8
D. COARSE SAND	95.8
E. GRAVEL	143.6

NOTE:

ACTUAL FIELD CONDITIONS ARE TO BE VERIFIED DURING INSTALLATION.

MINIMUM BEARING AREAS (SQ M) FOR HORIZONTAL THRUST BLOCKS

PIPE SIZE	BEND	TYPE OF SOIL CONDITION				
		A	B	C	D	E
250	TEES, CAPS	5.25	2.65	1.77	1.30	0.88
	1/4	7.43	3.72	2.48	1.86	1.25
	1/8	4.04	2.00	1.35	1.02	0.65
	1/16	2.04	1.02	0.07	0.51	0.33
	1/32	1.07	.051	0.37	0.28	0.19

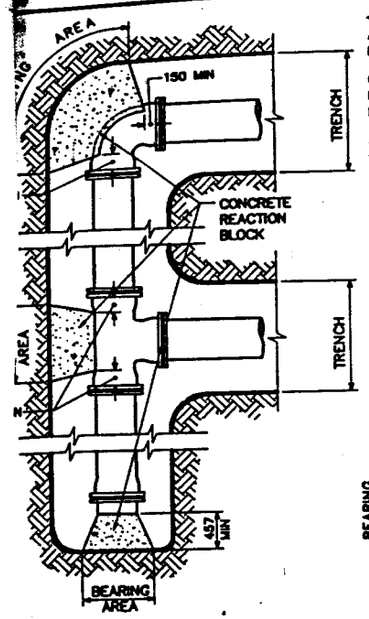

PLAN

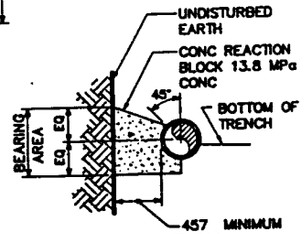

ELEVATION

CONCRETE THUST BLOCK (HORIZ)

17 C2 C9 **DETAIL**

NO SCALE

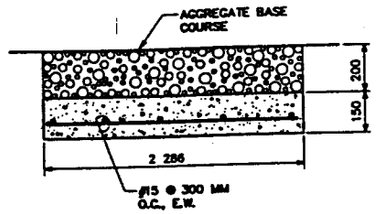

CONCRETE PAD

19 C2 C9 **DETAIL**

C7

NO SCALE

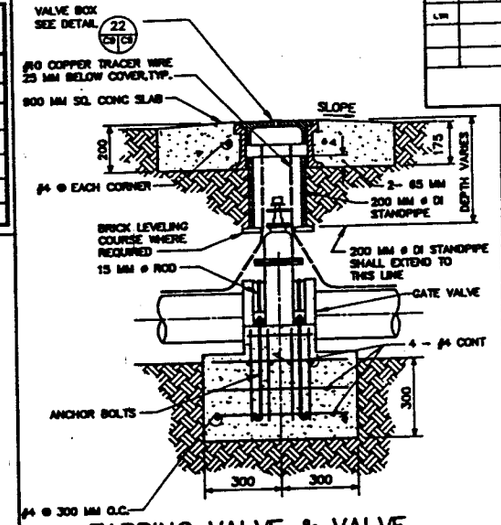

TAPPING VALVE & VALVE BOX ASSEMBLY

21 C2 C9 NO SCALE

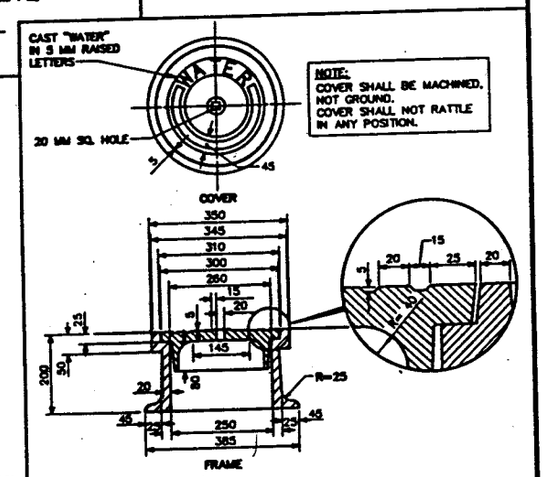

NOTE:
COVER SHALL BE MACHINED, NOT GROUND.
COVER SHALL NOT RATTLE IN ANY POSITION.

22 C9 C9 VALVE BOX

NO SCALE

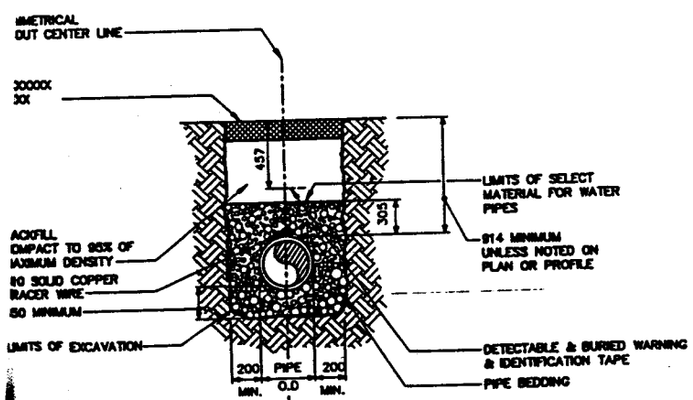

TYPICAL TRENCH

18 C2 C9 **DETAIL**

NO SCALE

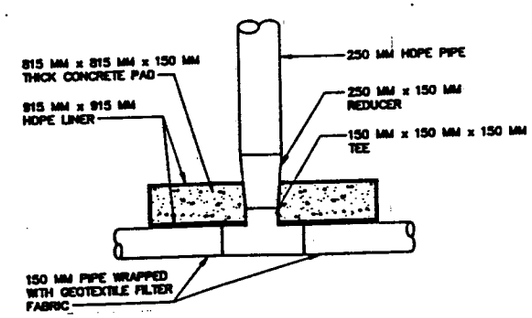

LEAK MONITORING STATION

20 C4 C9 **DETAIL**

NO SCALE

ALL DIMENSIONS ARE IN MILLIMETERS (mm) UNLESS OTHERWISE NOTED.

The Contractor will be responsible for coordinating the work among the various trades as necessary to avoid conflicts and to insure the installation of all work within the available space.

IF SHEET IS LESS THAN (24" x 36") IT IS A REDUCED PRINT – SCALE REDUCED ACCORDINGLY

HARVEY R. HIRA HAWAII U.S.A.

THIS DWG WAS PREPARED BY ME OR UNDER MY SUPERVISION

7-7-93

REVISIONS				
LTR	DESCRIPTION	PREPD BY	DATE	APPROVED

PYES HIR ASSOCIATES, INC. ARCHITECTS ENGINEERS PLANNERS

DEPARTMENT OF THE NAVY NAVAL FACILITIES ENGINEERING COMMAND

PACIFIC DIVISION
MAKALAPA, HAWAII

ANDERSEN AFB GUAM

FY93 MCAF 8123

FIRE TRAINING FACILITY

MISCELLANEOUS DETAILS

SIZE D

CODE IDENT NO 80091

DRAWING NO 7908928

CONTRACT NO N62766-92-C-0203

SCALE AS SHOWN

SHEET 11 OF 59

C-9

BORING LOG NO. 1

EQUIPMENT: 4-7/8" DIA. ROTARY WASH

ELEVATION -- DATE 02/11/83

LABORATORY TESTS	DRILL RATE (min/ft)	BLOWS/ft	MOISTURE CONTENT(%)	DRY DENSITY (pcf)	DEPTH	SAMPLE SYMBOL	
		68	14.7	83			DARK ORANGE-BROWN-WHITE SILTY SANDY LIMESTONE GRAVEL (GH) - dense, moist, with short grass and loose gravel on surface
					0		LIGHT BROWN-WHITE SANDY GRAVELLY LIMESTONE - moderately hard
							hard from 5'
		10/0"			5		
		10/0"			10		
		10/0"			15		(no free water encountered)
					20		
					25		
					30		
					35		

FILL

BORING LOG NO. 3

EQUIPMENT: 4-7/8" DIA. ROTARY WASH

ELEVATION -- DATE 02/11/83

LABORATORY TESTS	DRILL RATE (min/ft)	BLOWS/ft	MOISTURE CONTENT(%)	DRY DENSITY (pcf)	DEPTH	SAMPLE SYMBOL	
					0		DARK REDDISH BROWN SILTY FINE SAND (SM-MH) - medium dense, moist
SA		46/6"	6.8	87			LIGHT BROWN-WHITE SANDY GRAVELLY LIMESTONE - moderately hard
SA		46/4"	10.9	72	5		
							hard from 9'
		10/0"			10		
		10/0"			15		(no free water encountered)
		10/0"			20		
					25		
					30		
					35		

FILL

BORING LOG NO. 5

EQUIPMENT: 4-7/8" DIA. ROTARY WASH

ELEVATION -- DATE 02/11/83

LABORATORY TESTS	DRILL RATE (min/ft)	BLOWS/ft	MOISTURE CONTENT(%)	DRY DENSITY (pcf)	DEPTH	SAMPLE SYMBOL	
					0		ORANGE-BROWN SILTY SANDY LIMESTONE GRAVEL (GH) - dense, moist
		10/0"					LIGHT BROWN-WHITE SANDY GRAVELLY LIMESTONE hard
					5		becoming weak from 5'
SA		59	14.7	89			
					10		hard from 11'
		10/0"					
		10/0"			15		
					20		(no free water encountered)
					25		
					30		
					35		

FILL

BORING LOG NO. 2

EQUIPMENT: 4-7/8" DIA. ROTARY WASH

ELEVATION -- DATE 02/11/83

LABORATORY TESTS	DRILL RATE (min/ft)	BLOWS/ft	MOISTURE CONTENT(%)	DRY DENSITY (pcf)	DEPTH	SAMPLE SYMBOL	
					0		DARK ORANGE-BROWN-WHITE SILTY SANDY LIMESTONE GRAVEL (GH) - dense, moist, with short grass and loose gravel on surface
		10/0"					LIGHT BROWN-WHITE SANDY GRAVELLY LIMESTONE hard
					5		
		10/0"					
					10		
		10/0"					
					15		
		10/0"					
					20		(no free water encountered)
					25		
					30		
					35		

FILL

BORING LOG NO. 4

EQUIPMENT: 4-7/8" DIA. ROTARY WASH

ELEVATION -- DATE 02/11/83

LABORATORY TESTS	DRILL RATE (min/ft)	BLOWS/ft	MOISTURE CONTENT(%)	DRY DENSITY (pcf)	DEPTH	SAMPLE SYMBOL	
					0		DARK REDDISH BROWN SILTY FINE SAND (SM-MH) - medium dense, moist
		48/3"					BROWN-WHITE SANDY GRAVELLY LIMESTONE moderately hard
					5		hard from 5'
		10/0"					
					10		
		10/0"					
					15		
		10/0"					
					20		(no free water encountered)
					25		
					30		
					35		

FILL

BORING LOC LOCATION, SEE SHEET C-2

REVISIONS				
LTR	DESCRIPTION	PREPD BY	DATE	APPROVED

MAJOR DIVISIONS				TYPICAL NAMES
COARSE GRAINED SOILS	GRAVELS	GRAVEL AND GRAVELLY SOILS WITH LITTLE OR NO FINES	GW	WELL GRADED GRAVELS, GRAVEL - SAND MIXTURES
			GP	POORLY GRADED GRAVELS, GRAVEL-SAND MIXTURES
		GRAVELS WITH OVER 12% FINES	GM	SILTY GRAVELS, POORLY GRADED GRAVEL-SAND-SILT MIXTURES
			GC	CLAYEY GRAVELS, POORLY GRADED GRAVEL-SAND-CLAY MIXTURES
	SANDS	CLEAN SANDS WITH LITTLE OR NO FINES	SW	WELL GRADED SANDS, GRAVELLY SANDS
			SP	POORLY GRADED SANDS, GRAVELLY SANDS
		SANDS WITH OVER 12% FINES	SM	SILTY SANDS, POORLY GRADED SAND-SILT MIXTURES
			SC	CLAYEY SANDS, POORLY GRADED SAND-CLAY MIXTURES
FINE GRAINED SOILS	SILTS AND CLAYS		ML	INORGANIC SILTS AND VERY FINE SANDS, ROCK FLOUR, SILTY OR CLAYEY FINE SANDS, OR CLAYEY SILTS WITH SLIGHT PLASTICITY
			CL	INORGANIC CLAYS OF LOW TO MEDIUM PLASTICITY, GRAVELLY CLAYS, SANDY CLAYS, SILTY CLAYS, LEAN CLAYS
			OL	ORGANIC SILTS AND ORGANIC SILTY CLAYS OF LOW PLASTICITY
	SILTS AND CLAYS		MH	INORGANIC SILTS, MICACEOUS OR DIATOMACEOUS FINE SANDY OR SILTY SOIL, ELASTIC SILTS
			CH	INORGANIC CLAYS OF HIGH PLASTICITY, FAT CLAYS
			OH	ORGANIC CLAYS OF MEDIUM TO HIGH PLASTICITY, ORGANIC SILTS
HIGHLY ORGANIC SOILS			Pt	PEAT AND OTHER HIGHLY ORGANIC SOILS

UNIFIED SOIL CLASSIFICATION SYSTEM

SA = Sieve Analysis

"UNDISTURBED" SAMPLE BULK SAMPLE

KEY TO TEST DATA

The Contractor will be responsible for coordinating the work among the various trades as necessary to avoid conflicts and to insure the installation of all work within the available spaces.

IF SHEET IS LESS THAN (22" X 34") IT IS A REDUCED PRINT - SCALE REDUCED ACCORDINGLY

HARVEY E. RIDA REGISTERED PROFESSIONAL ENGINEER HAWAII U.S.A.

PETER LIM ASSOCIATES, INC. ARCHITECTS PLANNERS ENGINEERS

DEPARTMENT OF THE NAVY NAVAL FACILITIES ENGINEERING COMMAND

PACIFIC DIVISION
MAKALAPA, HAWAII

ANDERSEN AIR FORCE BASE GUAM

FY93 MCAF 8123

FIRE TRAINING FACILITY

BORING LOGS

SIZE D | CODE IDENT NO 80091 | DRAWING NUMBER 7906929

SCALE AS SHOWN | SPEC 41-92-0203 | SHEET 12 OF 59

C-10

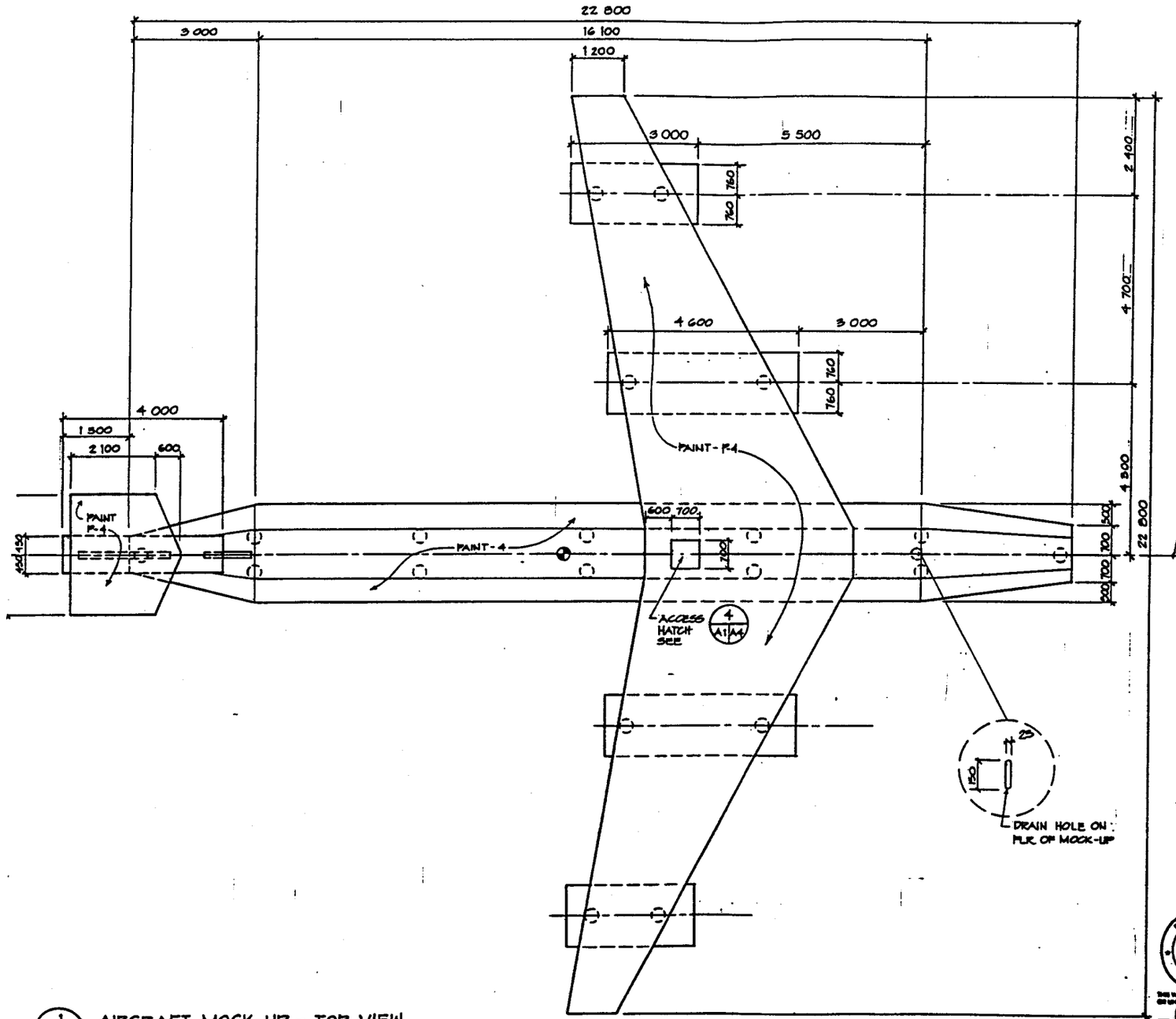

1 C-1 A-1 AIRCRAFT MOCK-UP - TOP VIEW
SCALE: 1:50

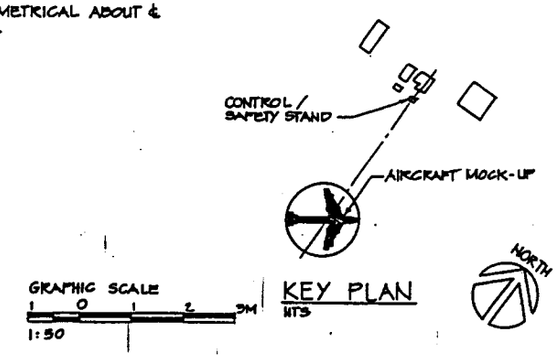

KEY PLAN
NTS

REVISIONS				
LTR	DESCRIPTION	PREP'D BY	DATE	APPROVED

ALL DIMENSIONS ARE MILLIMETERS (MM) UNLESS OTHERWISE NOTED

IF SHEET IS LESS THAN (22" X 34") IT IS A REDUCED PRINT - SCALE REDUCED ACCORDINGLY

The Contractor will be responsible for coordinating the work among the various trades as necessary to avoid conflicts and to insure the installation of all work within the available space.

PETER H. Y. HSI REGISTERED PROFESSIONAL ARCHITECT HAWAII, U.S.A.

THIS WORK WAS PREPARED BY ME OR UNDER MY SUPERVISION

PETER HSI ASSOCIATES, INC.
ARCHITECTS PLANNERS ENGINEERS

DEPARTMENT OF THE NAVY NAVAL FACILITIES ENGINEERING COMMAND
PACIFIC DIVISION
MAKALAPA, HAWAII

ANDERSEN AIR FORCE BASE
FY93 MCAF 8123
FIRE TRAINING FACILITY

AIRCRAFT MOCK-UP DETAIL; TOP VIEW

SIZE	CODE IDENT NO	NAVFAC DRAWING NO
D	80091	7908930

CONSTR CONTR NO N62766-92-C-0203

SCALE | SPEC 41-92-0203 | SHEET 13 OF 59

A-1

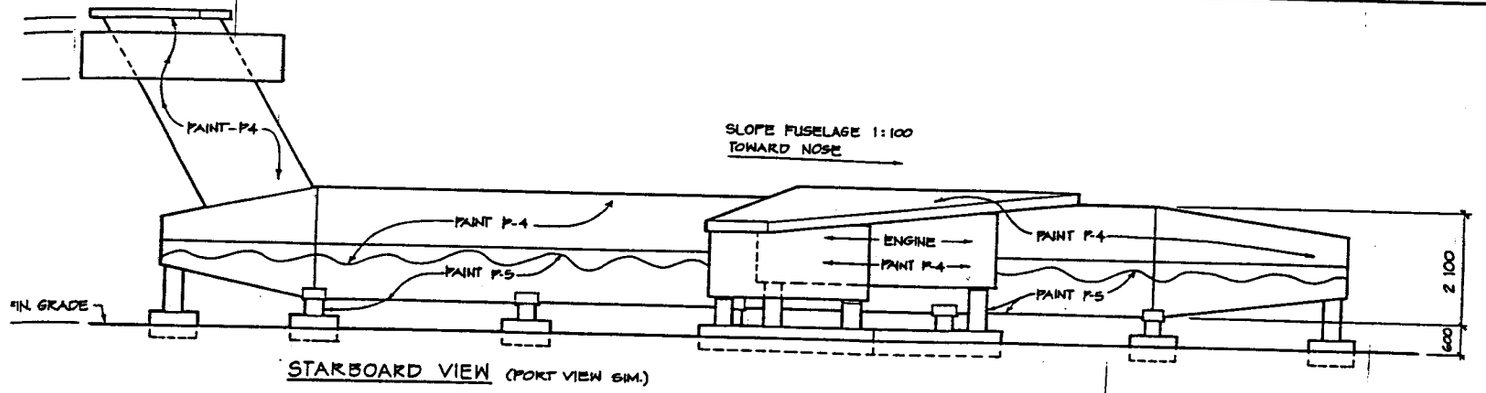

STARBOARD VIEW (PORT VIEW SIM.)

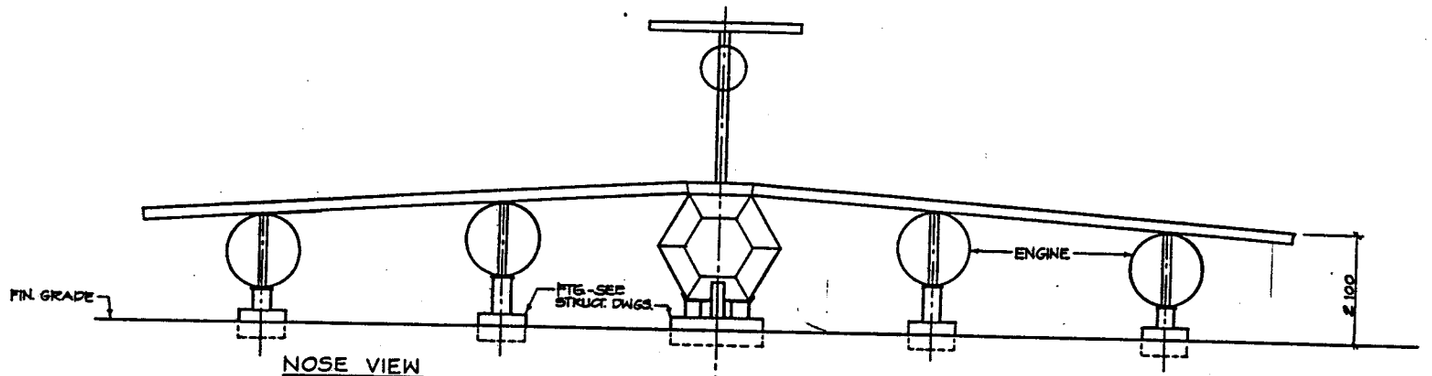

NOSE VIEW

SYMMETRICAL ABOUT ℄

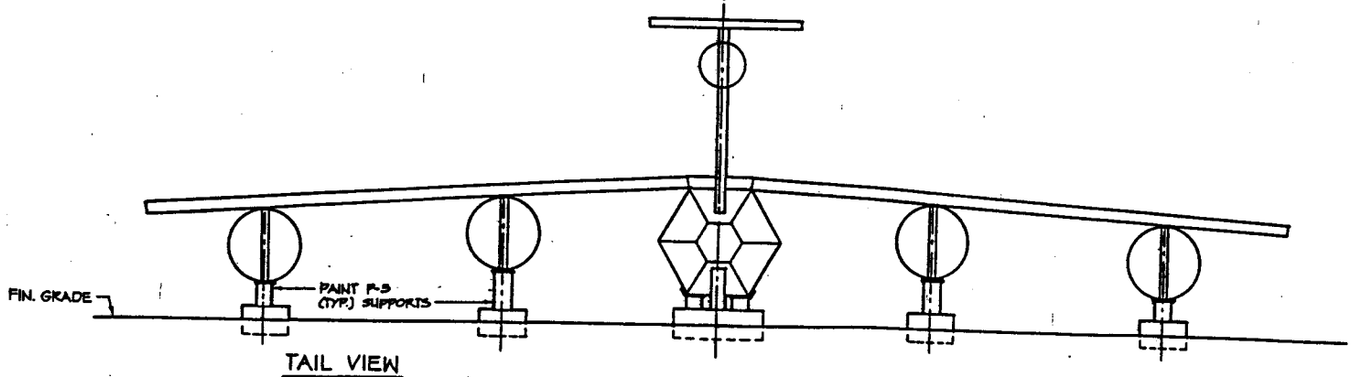

TAIL VIEW

1 / A-2 A-2 AIRCRAFT MOCK-UP - VIEWS
SCALE: 1:50

GRAPHIC SCALE:
1 0 1 2 3M
1:50

REVISIONS

LTR	DESCRIPTION	PREPD BY	DATE	APP

ALL DIMENSIONS ARE MILLIMETERS UNLESS OTHERWISE NOTED

IF SHEET IS LESS THAN (22" X 34") IT IS A REDUCED PRINT - SCALE REDUCED ACCORDI

The Contractor will be responsible for coordinating the work among the various trades as necessary to avoid conflicts and to insure the installation of all work within the available space.

PETER HIS ASSOCIATES, INC. ARCHITECTS PLANNERS ENGINEERS

DSGN WC DR RS CHK HR
SUPV WC CHK PH
DRAWN BY
PRIN MANAGER OFFICE PRESIDENT
PROJECT MANAGER
SUPV ARCHITECT
PROJECT ENGINEER
APPROVED LOCAL ENG. OFF. DATE
FOR CONSTRUCTION MANPAC

DEPARTMENT OF THE NAVY NAVAL FACILITIES ENGINEERING CO
PACIFIC DIVISION
MAKALAPA, HAWAII
PACIFIC AIR FORCE BASE
FY96 MCAF 8123
FIRE TRAINING FACILITY
AIRCRAFT MOCK-UP - VIEWS

SIZE D | CODE IDENT NO 80091 | MANPAC DRAWING NO 7906931
ENGRG DRAWN NO N62766-92-C-0
SCALE | SPEC 41-92-0203 | SHEET 14

A-2

SATISFACTORY TITLE DATE

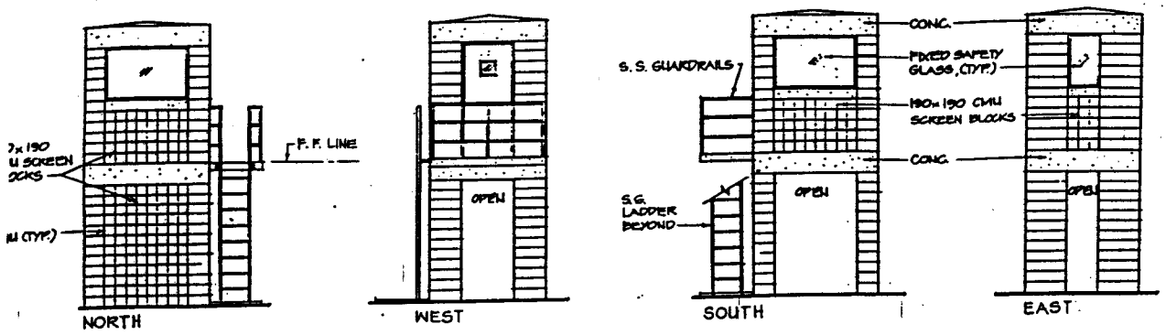

EXTERIOR ELEVATIONS

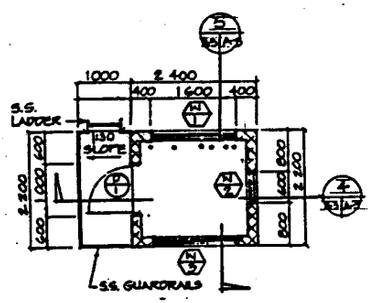

UPPER LEVEL PLAN

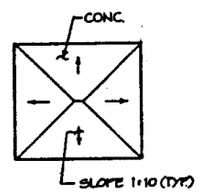

ROOF PLAN

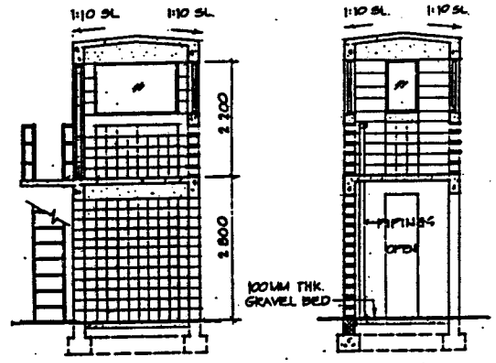

4 BLDG SECTION
A-3/A-3 SCALE 1:50

5 BLDG SECTION
A-3/A-3 SCALE 1:50

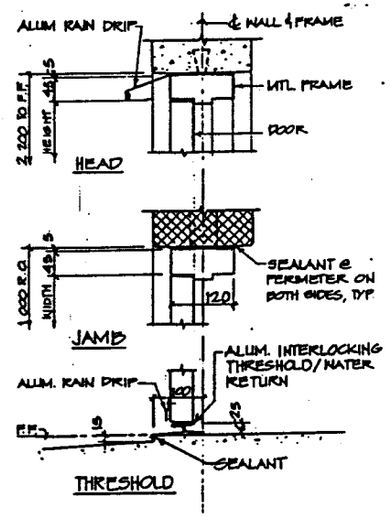

2 DOOR DETAIL
A-3/A-3 SCALE: 1:5

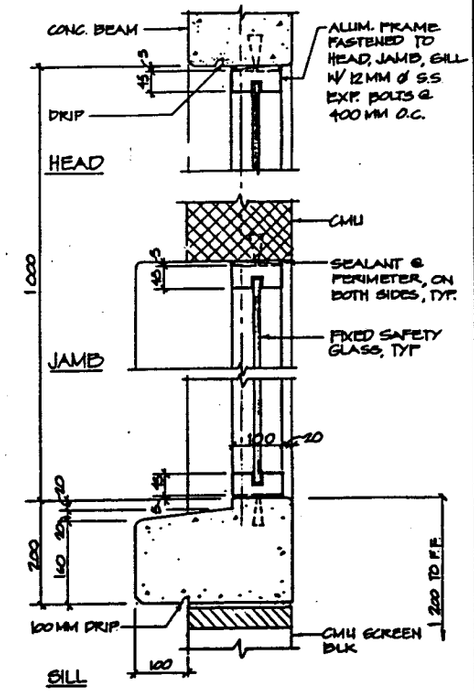

3 TYP. WINDOW DETAIL
A-3/A-3 SCALE: 1:5

MATERIAL LEGEND

CMU

CONC.

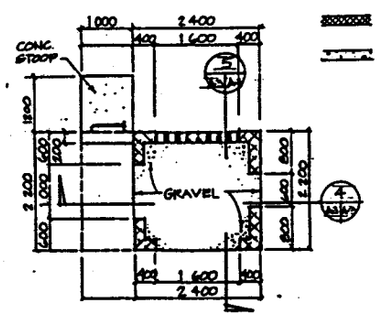

LOWER LEVEL PLAN

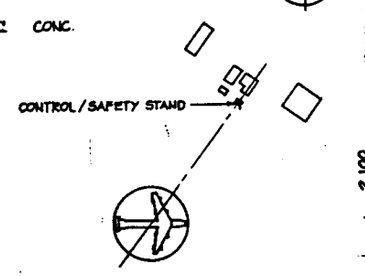

KEY PLAN

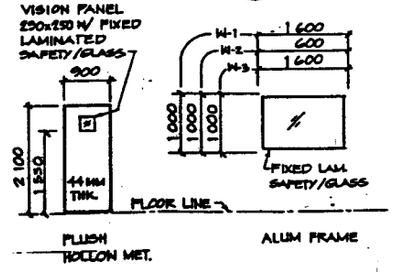

DOOR TYPE

WINDOW TYPE

1 CONTROL/SAFETY STAND DETAIL
A-3/A-3 SCALE: 1:50

GRAPHIC SCALE:

1 0 1 2 3 CM
1:5

1 0 1 2 3M
1:50

ALL DIMENSIONS ARE MILLIMETERS (MM) UNLESS OTHERWISE NOTED

IF SHEET IS LESS THAN (22" X 34") IT IS A REDUCED PRINT — SCALE REDUCED ACCORDINGLY

The Contractor will be responsible for coordinating the work among the various trades as necessary to avoid conflicts and to insure the installation of all work within the available space.

REVISIONS				
LTR	DESCRIPTION	PREPD BY	DATE	APPROVED

PETER HIE ASSOCIATES, INC. ARCHITECTS PLANNERS ENGINEERS

DEPARTMENT OF THE NAVY NAVAL FACILITIES ENGINEERING COMMAND
PACIFIC DIVISION
MAKALAPA, HAWAII

ARCHITECT AND ENGINEER SHARE

FY93 MCAP 6000
FIRE TRAINING FACILITY

CONTROL/SAFETY STAND DETAIL - PLANS ELEVATIONS & SECTIONS, DR. & WDW. DETAILS

DRAWN WC CHKD RS CHKD NR
DATE 7/92 SCALE 1/4" = 1'-0"
PRESIDENT

SIZE D CODE IDENT NO 80091 DRAWING NO 7908932
CONTRACT NO N62766-92-C-0203
SCALE DATE 4-22-0203 SHEET 15 OF 59

A-3

INTERIOR FINISH & COLOR SCHEDULE

ROOM	ITEM	MATERIAL	COLOR CODE	REMARKS
OWER - LEVEL PACE	WALLS	CMU, CONC.	P-1	
	CEILING	CONC.	P-1	
CONTROL ROOM	FLOOR	CONC.	—	
	WALLS & SCREEN BLOCKS	CMU, CONC	P-3	
	CEILING	CONC.	P-3	
	DOOR & DOOR FRAME	STL.	P-2	
FUSELAGE	—	—	—	NO FINISH

EXTERIOR FINISH & COLOR SCHEDULE

ITEM	MATERIAL	FINISH	COLOR CODE	REMARKS
WALL	CMU, CONC.	BLAST - COATING	P-1	
SCREEN BLOCKS	CMU.	BLAST - COATING	P-1	PAINT INNER SURFACES
ROOF	CONC.	BLAST - COATING	P-1	
DR. & DR. FRAME	STL.	PAINT	P-2	
WINDOW FRAME	ALUM.	ANODIZED	DK. BRONZE	
BALCONY	CONC.	NONE	—	
FUSELAGE	STL.	FIRE-RETARDANT PAINT	P-4 / P-5	P-4 UPPER P-5 LOWER
WING ENGINES TAIL SURFACES	STL.	↓	↓	
SUPPORTS	CONC.	↓	P-5	
PROPANE	STL.	PAINT	P-1	
FUEL	↓	↓	↓	
WATER	↓	↓	↓	
TANK SUPPORT	CONC.	↓	↓	

COLOR CODE

PAINT		
P-1	* 13578	(ANTIQUE LINEN)
P-2	* 20117	(TOBACCO BROWN)
P-3	27180	
P-4	34127	
P-5	37030	

NOTE:

1. PAINT COLOR NUMBERS ARE TAKEN FROM FEDERAL STANDARD NO. 595a COLORS
2. * DENOTES ANDERSEN AIR FORCE BASE BASE COLOR

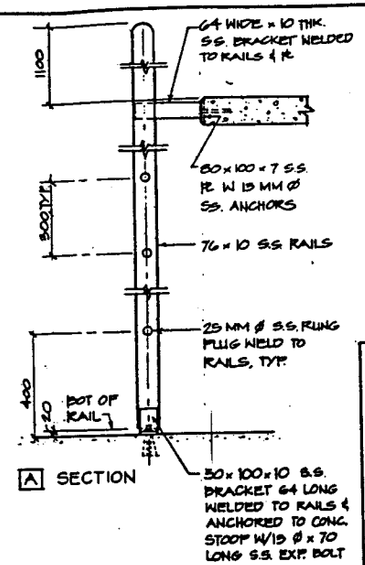

A SECTION

1 LADDER DETAIL
A-3 A-4 SCALE: 1 : 10

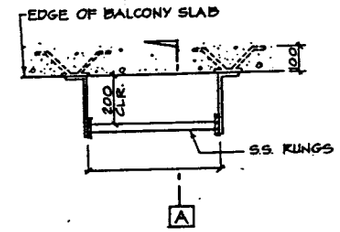

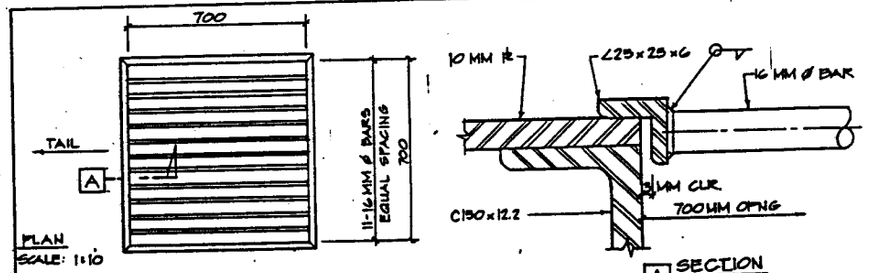

4 MOCK-UP ACCESS HATCH DETAIL
A1 A4

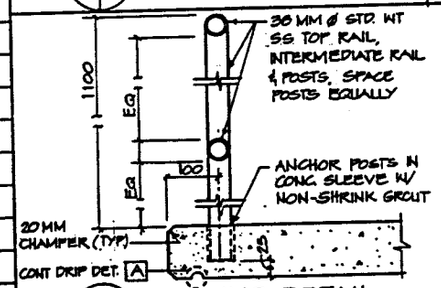

2 RAILING DETAIL
A-3 A-4 SCALE: 1:5

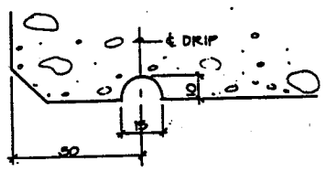

A DRIP DETAIL
FULL SCALE

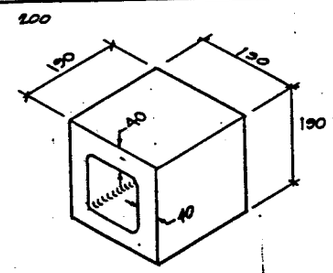

3 CMU SCREEN BLOCK
A-4 A-4 SCALE: 1:5

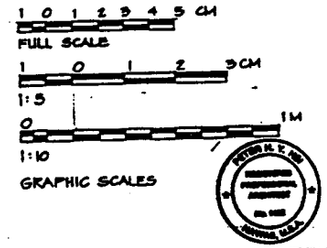

The Contractor will be responsible for coordinating the work among the various trades as necessary to avoid conflicts and to insure the installation of all work within the available space.

ALL DIMENSIONS ARE MILLIMETERS UNLESS OTHERWISE NOTED

IF SHEET IS LESS THAN (22" X 34") IT IS A REDUCED PRINT - SCALE REDUCED ACCORDINGLY

A-4

REVISIONS				
LTR	DESCRIPTION	PREPD BY	DATE	APPROVED

PETER HIE ASSOCIATES, INC.
ARCHITECTURE PLANNING ENGINEERING

DEPARTMENT OF THE NAVY NAVAL FACILITIES ENGINEERING COMMAND
PACIFIC DIVISION
MAKALAPA, HAWAII

ANDERSEN AIR FORCE BASE GUAM

FY93 MCAF 6123
FIRE TRAINING FACILITY

INTERIOR & EXTERIOR - FINSH & COLOR SCHEDULE, COLOR CODE, & MISC. DETAILS

SIZE D | CODE IDENT NO 80091 | DRAWING NO 7908933

SCALE | SPEC 41-92-0203 | SHEET 16 OF 33

GENERAL NOTES

1. "GENERAL NOTES AND TYPICAL DETAILS" APPLY TO ALL DRAWINGS UNLESS OTHERWISE SHOWN OR NOTED. APPLY TYPICAL DETAILS TO SIMILAR CONDITIONS THROUGHOUT. MODIFY TYPICAL DETAILS AS REQUIRED AND AS DIRECTED BY THE CONTRACTING OFFICER TO MEET SPECIAL CONDITIONS.
2. VERIFY ALL EXISTING DIMENSIONS AND ON-SITE CONDITIONS PRIOR TO START OF WORK.
3. ELEVATIONS ARE WITH REFERENCE TO THE DATUM NOTED ON THE SITE PLAN.
4. SEE ARCHITECTURAL DRAWINGS FOR DETAILS AND DIMENSIONS NOT NOTED OR SHOWN.
5. SEE MECHANICAL AND ELECTRICAL DRAWINGS FOR SIZES AND LOCATIONS OF PIPE SLEEVES, BLOCK-OUTS, EQUIPMENT PADS, EMBEDDED ITEMS, ETC.

BASIC DESIGN LOADS

1. ROOF LIVE LOAD . . . . . 100 kg/m^2
2. FLOOR LIVE LOAD . . . . . 490 kg/m^2
3. MOCK-UP AIRCRAFT: . . . . . 200 kg/m^2
4. WIND LOAD: . . . . . 250 km/h
5. SEISMIC ZONE (AFM 88-3, CH.13) 3
   K=1.33 CS=0.14 I=1.0

FOUNDATION NOTES

1. A SOILS ENGINEERING REPORT, DATED 16 FEB. 1993, OF A FOUNDATION INVESTIGATION OF THE BUILDING SITE HAS BEEN PREPARED BY GEO-ENGINEERING AND TESTING, INC.
2. DESIGN ALLOWABLE SOIL BEARING PRESSURE: . . . . . 24,400 kg/m^2
3. PASSIVE SOIL PRESSURE: . . . . . 7320 kg/m^2
4. ACTIVE SOIL PRESSURE: . . . . . 640 kg/m^3 *
5. FOUNDATION MATERIAL: NATURAL, FIRM LIMESTONE OR COMPACTED LIMESTONE FILL

* SATURATED ACTIVE SOIL PRESSURE 1600 kg/m^3

STRUCTURAL STEEL NOTES

1. ALL MATERIALS AND WORKMANSHIP SHALL BE IN ACCORDANCE WITH THE AISC "SPECIFICATION FOR THE DESIGN FABRICATION, AND ERECTION OF STRUCTURAL STEEL FOR BUILDINGS" AND THE AWS "STRUCTURAL WELDING CODE" EXCEPT WHERE MODIFIED BY THE PLANS AND SPECIFICATIONS.
2. MATERIAL
   A. STEEL: ASTM A36M(PIPE COLUMNS-ASTM A53, TYPE S, GRADE B)
   B. WELDING ELECTRODES: AWS A5.1 OR A5.5 E70XX (LOW HYDROGEN)
   C. BOLTS: ASTM A307
   D. ALL STRUCTURAL STEEL INCLUDING PLATES, BOLTS, WASHERS, NUTS, AND ANCHOR BOLTS SHALL BE HOT-DIPPED GALVANIZED. (EXCEPT FOR STEEL FOR MOCK-UP AIRCRAFT).
3. ALL WELDING SHALL BE DONE BY CERTIFIED WELDERS ONLY.
4. SUBMIT SHOP AND ERECTION DRAWINGS FOR REVIEW.

CONCRETE NOTES

1. CONCRETE STRENGTHS:

USE	28-DAY COMPR. STR.
ALL CONCRETE	fc' - 30 MPa

2. REINFORCING STEEL:

ALL REINFORCING BARS EXCEPT BEAM STIRR-UPS AND COLUMN TIES (EPOXY COATED):	ASTM A775, GRADE 400
BEAM STIRRUPS AND COLUMN TIES (EPOXY COATED):	ASTM A775, GRADE 300

3. UNLESS OTHERWISE NOTED, LAP REINFORCING 48 BAR DIAMETERS AT SPLICES, 600mm. MINIMUM. STAGGER SPLICES WHEREVER POSSIBLE.
4. REINFORCEMENT IN WALLS, COLUMNS, ETC., SHALL BE DOWELLED TO SUPPORTING FOOTINGS, BEAMS, COLUMNS AND WALLS WITH BARS OF SAME SIZE AND SPACING AS VERTICAL AND HORIZONTAL BARS, UNLESS SHOWN OTHERWISE. ALL DOWELS SHALL HAVE A MINIMUM EMBEDMENT OF 48 BAR DIAMETERS AND SHALL LAP WITH VERTICAL AND HORIZONTAL BARS A MINIMUM OF 48 BAR DIAMETERS.
5. CONCRETE COVER FOR REINFORCEMENT:
   A. FOOTINGS, FOUNDATION BEAMS, ETC.:
      1) POURED AGAINST EARTH . . . . . 100 mm.
      2) POURED AGAINST FORMS AND LATER EXPOSED TO EARTH . . . . . 70 mm.
   B. COLUMNS AND BEAMS (TO TIES, SPIRALS OR STIRRUPS) . . . . . 70 mm.
   C. SLABS AND WALLS . . . . . 50 mm.
6. ALL INSERTS, ANCHOR BOLTS, PLATES, ETC. TO BE EMBEDDED IN CONCRETE SHALL BE HOT-DIP GALVANIZED, UNLESS NOTED OTHERWISE.

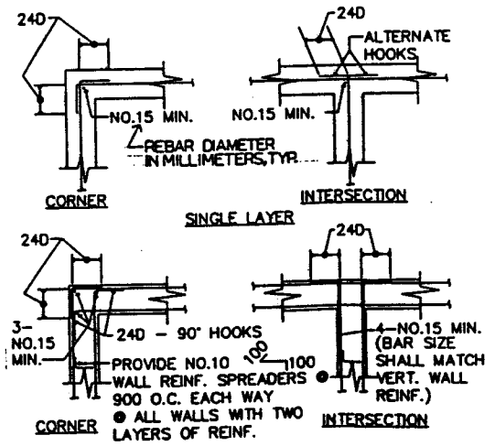

TYPICAL DETAILS OF FOOTING AND WALL REINFORCING

NOTE: SEE OTHER DETAILS AND NOTES FOR SIZE AND SPACING OF REINFORCING. LAP AND HOOK FOOTING BARS SIMILAR TO WALL REINF.

D = BAR DIAMETER

REINFORCED MASONRY NOTES

1. ALL CONCRETE MASONRY UNITS (CMU) SHALL BE LOAD BEARING UNITS, ASTM C-90, GRADE N, TYPE II.
2. MORTAR: TYPE M, ASTM C-270
3. GROUT: 20 MPa 28-DAY STRENGTH
4. REINFORCING SAME AS REINFORCING FOR CONCRETE.
5. UNLESS OTHERWISE SHOWN, PROVIDE WALL REINFORCING AS FOLLOWS:

WALL THICK	VERT REINF.	HORIZ. REINF.
200	1-NO.15 @ 600 O.C.	2-NO.15 @ 800 O.C.

   SEE TYPICAL DETAILS FOR ADDED REINFORCING AT OPENINGS, ENDS, INTERSECTIONS AND CORNERS. SEE DRAWINGS FOR WALLS WITH SPECIAL REIN-FORCING.
6. REINFORCING BARS SHALL BE LAPPED A MINIMUM OF 48 BAR DIAMETERS WHERE SPLICED. STAGGER SPLICES WHEREVER POSSIBLE. DOWELS FROM CONCRETE FOOTINGS, SLABS, WALLS OR COLUMNS SHALL EXTEND INTO THE CMU BLOCK A MINIMUM OF 800 mm. DOWELS TO MATCH SIZE AND SPACING OF WALL REINFORCING.
7. ALL CELLS SHALL BE SOLIDLY GROUTED.

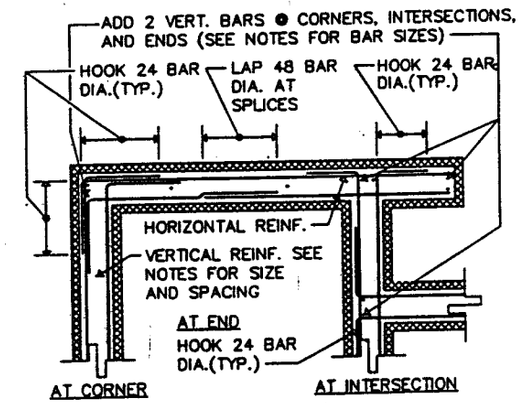

INTERMEDIATE BOND BEAM

SEE NOTES FOR BAR SIZE AND SPACING
STAGGER SPLICES IN HORIZONTAL REINF.

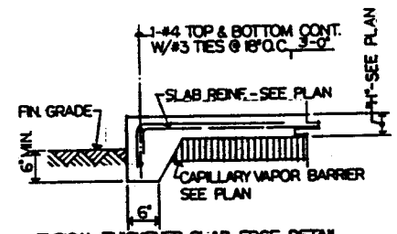

TYPICAL THICKENED SLAB EDGE DETAIL
NO SCALE

REVISIONS				
LTR	DESCRIPTION	PREPD BY	DATE	APPROVED

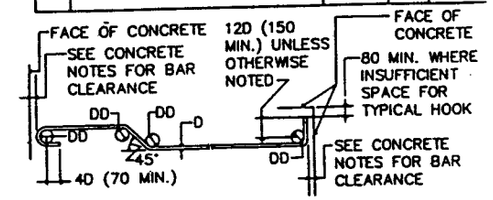

180° HOOK TRUSS BAR BEND 90° HOOK

DD = 6D FOR NO.10 THRU NO.25
DD = 8D FOR NO.30 & NO.35 BARS
DD = 10D FOR NO.45 & NO.55 BARS

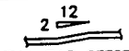

TYP. BAR OFFSET

TYPICAL REINFORCING BAR HOOKS, BENDS AND OFFSETS

NOTE: PROVIDE THESE HOOKS THROUGHOUT THE WORK WHERE INDICATED ON DRAWINGS, EXCEPT THAT STIRRUPS AND TIE HOOKS SHALL BE AS SHOWN IN THE ACI DETAILING MANUAL.

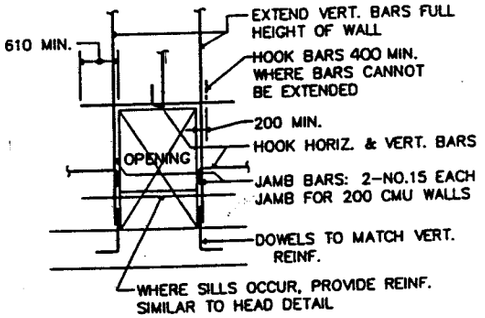

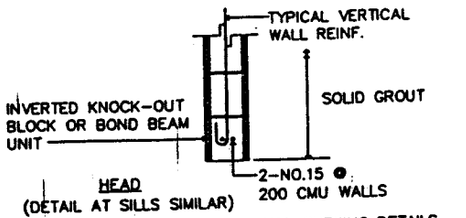

TYPICAL CONCRETE MASONRY WALL OPENING DETAILS

The Contractor will be responsible for coordinating the work among the various trades as necessary to avoid conflicts and to insure the installation of all work within the available space.

IF SHEET IS LESS THAN (22" X 34") IT IS A REDUCED PRINT - SCALE REDUCED ACCORDINGLY

ENGINEERING COSTER GROUP, INC. CONSULTING ENGINEERS

PETER HIS ASSOCIATES, INC. ARCHITECTS PLANNERS ENGINEERS

DEPARTMENT OF THE NAVY NAVAL FACILITIES ENGINEERING COMMAND
PACIFIC DIVISION
HAKALAPA HAWAII

ASSISTANT APO FY93 MCAP 0120
FIRE TRAINING FACILITY

General Notes & Typical Details

DRAWN GK | CHK VH | APPD EL

DATE D | CODE IDENT NO 80091 | NAVFAC DRAWING NO 7908936

SCALE | SPEC 41-92-0203 | CONTRACT NO N62766-92-C-0203 | SHEET 17 OF 59

S-1

REVISIONS				
LTR	DESCRIPTION	PREPD BY	DATE	APPROVED

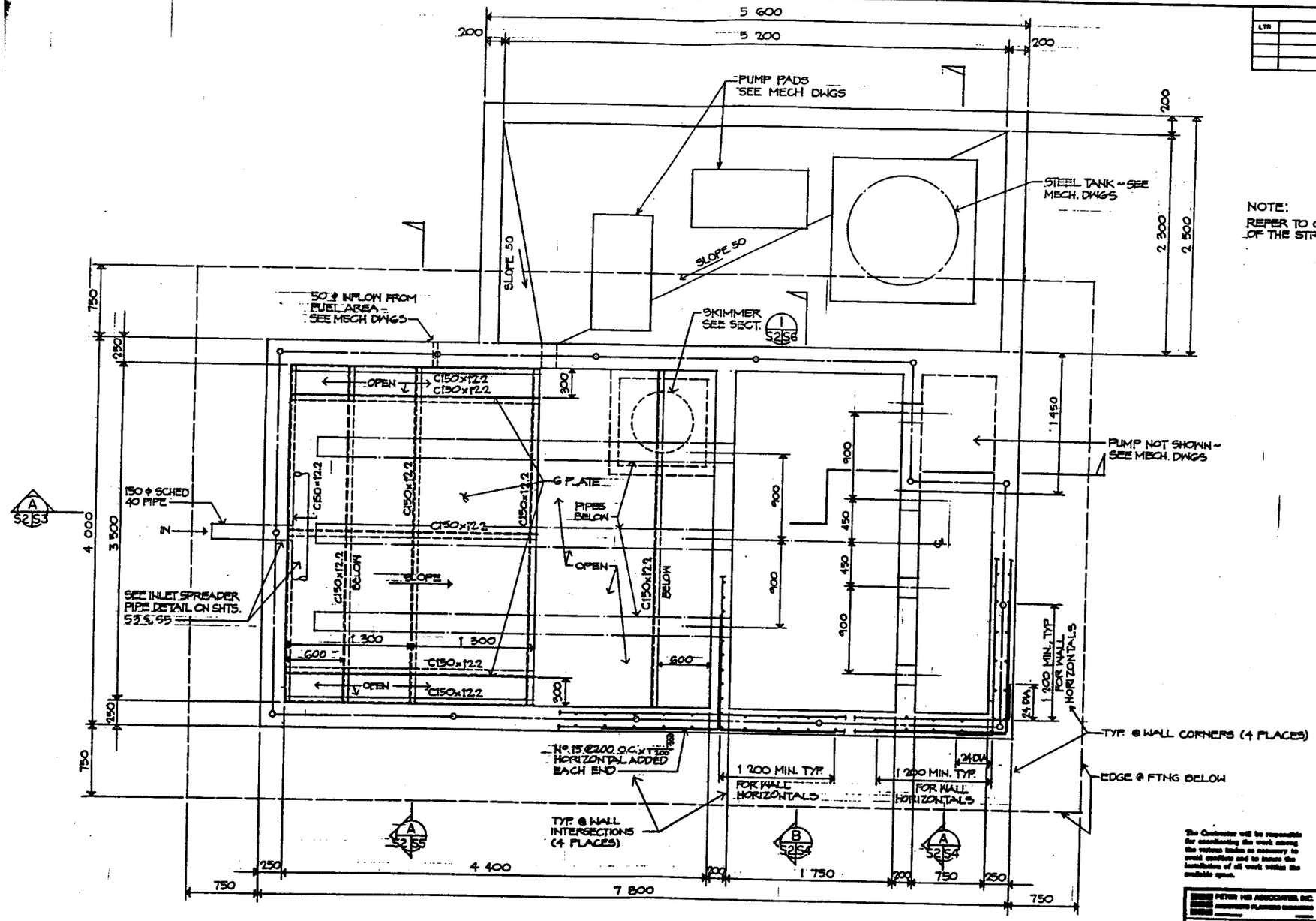

NOTE:
REFER TO CIVIL DRAWINGS FOR LOCATION OF THE STRUCTURE & SLAB ELEVATION.

ALL DIMENSIONS ARE IN MILLIMETERS (mm.) UNLESS OTHERWISE NOTED.

IF SHEET IS LESS THAN (22" X 34") IT IS A REDUCED PRINT – SCALE REDUCED ACCORDINGLY

The Contractor will be responsible for coordinating the work among the various trades as necessary to avoid conflicts and to insure the installation of all work within the available space.

GRAPHIC SCALE 1:20 0 1 2M

1 S2/S2 FOUNDATION PLAN ~ OIL/WATER SEPARATOR
SCALE: 1:20

PETER HIS ASSOCIATES INC. ARCHITECTS PLANNERS ENGINEERS

DEPARTMENT OF THE NAVY NAVAL FACILITIES ENGINEERING COMMAND
PACIFIC DIVISION
MAKALAPA HAWAII

FY90 MCAF P989
FIRE TRAINING FACILITY

Foundation Plan - Oil/Water Separator

D 80001 7908937 N62766-82-C-0203 41-82-0203 18 OF 59

REVISIONS				
LTR	DESCRIPTION	PREP'D BY	DATE	APPROVED

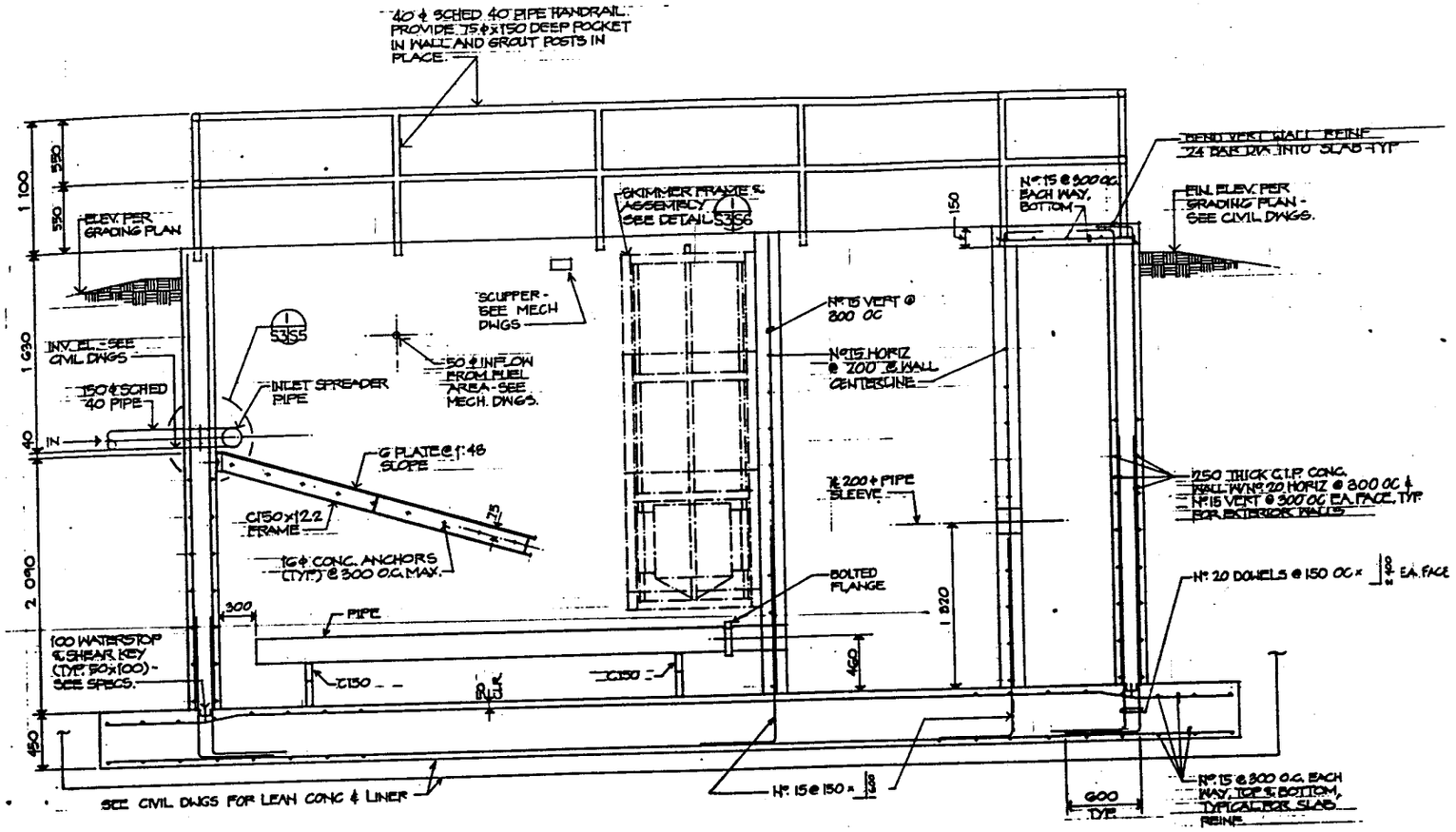

A SECTION
SCALE: 1:20
S4, S9 S2 S3

ALL DIMENSIONS ARE IN MILLIMETERS (mm.) UNLESS OTHERWISE NOTED.

The Contractor will be responsible for coordinating the work among the various trades as necessary to avoid conflicts and to insure the installation of all work within the available space.

IF SHEET IS LESS THAN (22" X 34") IT IS A REDUCED PRINT — SCALE REDUCED ACCORDINGLY.

GRAPHIC SCALE
0 1 2M
1:20

PETER MI ASSOCIATES, INC.
ARCHITECTS PLANNERS ENGINEERS

DEPARTMENT OF THE NAVY NAVAL FACILITIES ENGINEERING COMM.
PACIFIC DIVISION
PEARL HARBOR, HAWAII

DESIGNED GK | DRAWN BK | CHECKED EL
SUPV GK | PROJ ENGR EL
REVIEWED BY 7/23/92
PUBLIC WORKS OFFICER PWD/CEC
PROJECT MANAGER
DATE 11/2/92
APPROVED BY CONT. DATE
NAVAL CIVIL ENGR. 22 JUL
FOR COMMANDER NAVFAC

ASSIGNED AFB FY90 NGAF 9188
FIRE TRAINING FACILITY
Oil/Water Separator Section

SIZE	CODE IDENT NO	DRAWING NO
D	80091	7908938
SCALE	SPEC 41-92-0203	SHEET 19 OF

CONTR DRWG NO N62766-92-C-0

S-3

Interaction To DATE
TITLE

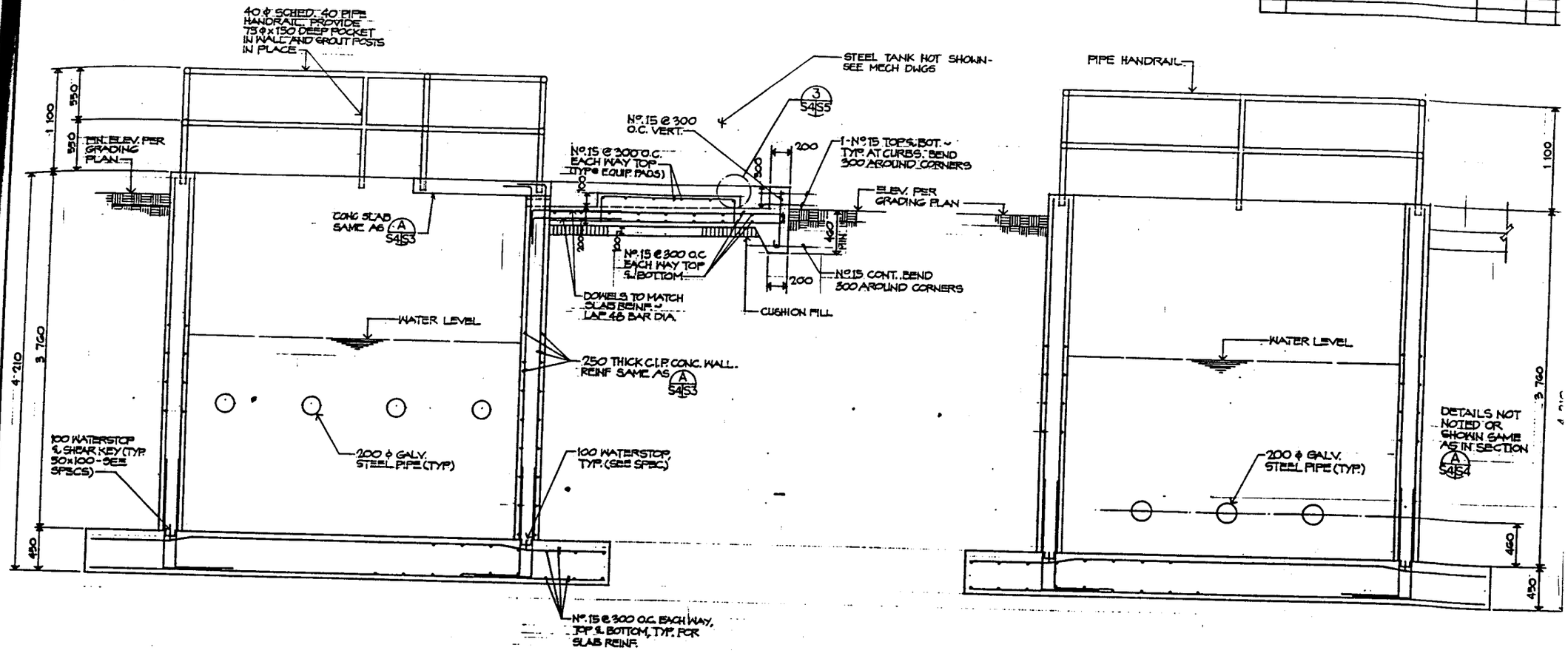

A SECTION
S5, S4 S2S4 SCALE: 1:20

B SECTION
S2S4 SCALE: 1:20

REVISIONS			
LTR	DESCRIPTION	PREP'D BY	DATE

ALL DIMENSIONS ARE IN MILLIMETERS (mm.) UNLESS OTHERWISE NOTED.

IF SHEET IS LESS THAN (36" X 24") IT IS A REDUCED PRINT — SCALE REDUCED ACCORDINGLY

The Contractor will be responsible for coordinating the work among the various trades as necessary to avoid conflicts and to insure the installation of all work within the available space.

GRAPHIC SCALE
1:20 0 1 2M

PETER HIS ASSOCIATES, INC.
ARCHITECTS-PLANNERS-ENGINEERS

DEPARTMENT OF THE NAVY
NAVAL FACILITIES ENGINEERING COMMAND
PACIFIC DIVISION
MAKALAPA, HAWAII

DES GK | DR BK | CHKD EL
SUPV GK | APP CHKD EL
SUBMITTED BY [illegible] 7/4/77
PROJ MANAGER [illegible] PRESIDENT
PROJ ARCH [illegible] PROJ ENGR [illegible]
DATE [illegible] 77 [illegible]
APPROVED LINO E. GRUP DATE

ADDRESS AFO
FY80 MOAF 0988
FIRE TRAINING FACILITY

011/Water Separator Sections

DWG CODE IDENT NO
NAVFAC DRAWING NO

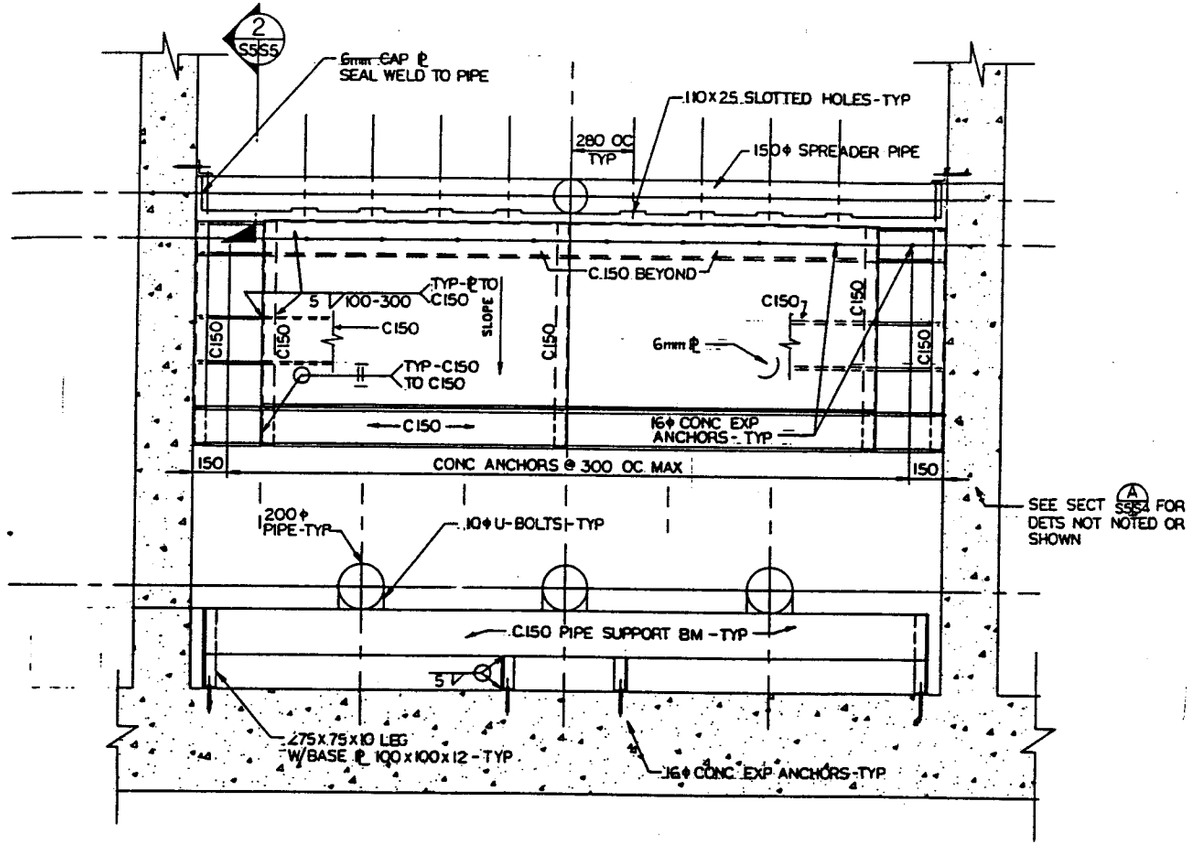

A S2S5 OIL SEPARATOR SECTION
NTS

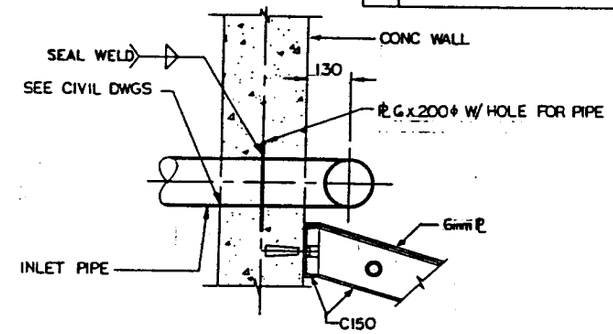

1 S3S5 INLET FEEDER PIPE
NTS

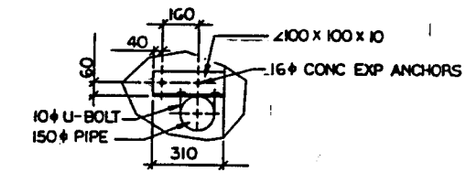

2 S5S5 SPREADER PIPE SUPPORT DETAIL
NTS

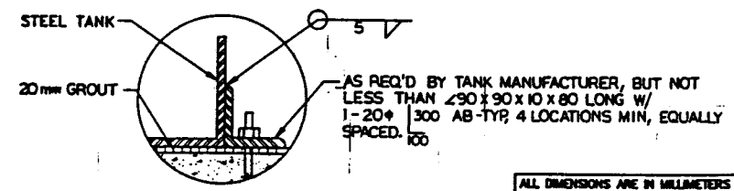

3 S4S5 DETAIL
NTS

ALL DIMENSIONS ARE IN MILLIMETERS (mm.) UNLESS OTHERWISE NOTED.

The Contractor will be responsible for coordinating the work among the various trades as necessary to avoid conflicts and to insure the installation of all work within the available space.

IF SHEET IS LESS THAN (22" X 34") IT IS A REDUCED PRINT — SCALE REDUCED ACCORDINGLY

PETER HEI ASSOCIATES, INC.

DEPARTMENT OF THE NAVY — NAVAL FACILITIES ENGINEERING COMM.
PACIFIC DIVISION
MAKALAPA, HAWAII

DES GK | DR VH | CHK EL
SUPV GK | CHK EL
SUBMITTED BY | DATE
FIRM MEMBER STYLES PRESIDENT
PROJECT MGR. | DR | CHK | DATE
APPROVED | DATE
FOR COMMANDER NAVFAC

ANDERSEN AFB
FY90 MCAF 5125
FIRE TRAINING FACILITY

Oil Separator Section and Details

SIZE D | CODE IDENT NO 80091 | NAVFAC DRAWING NO 7908940
CONTR CONTR NO N62786-92-C-02
SCALE | SPEC 41-92-0203 | SHEET 21 OF 5

S-5

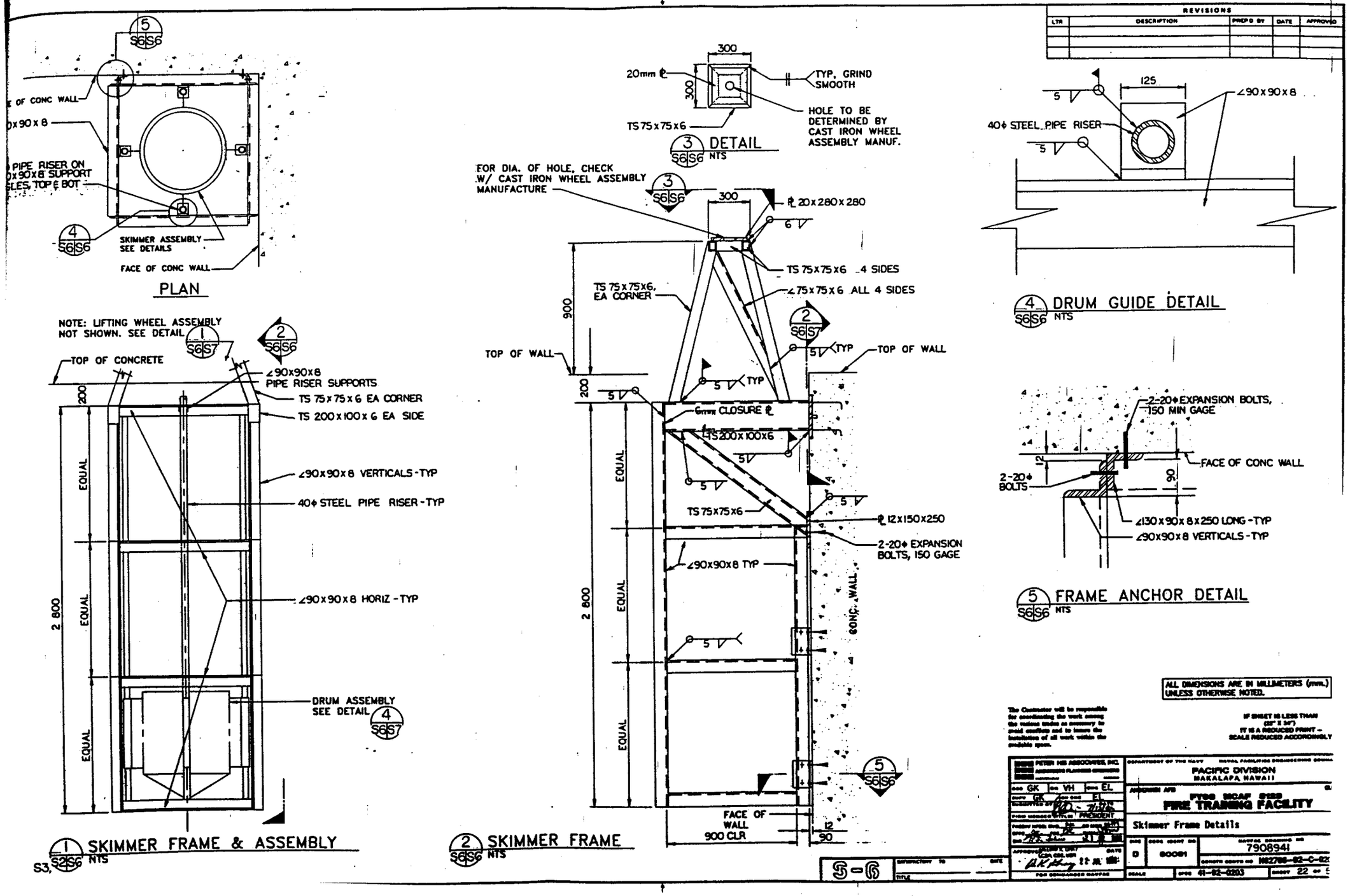

REVISIONS
LTR
DESCRIPTION
PREP'D BY
DATE
APPROVED
5 S6S6
E OF CONC WALL
0x90x8
PIPE RISER ON
0x90x8 SUPPORT
SLES, TOP & BOT
4 S6S6
SKIMMER ASSEMBLY SEE DETAILS
FACE OF CONC WALL
PLAN
NOTE: LIFTING WHEEL ASSEMBLY NOT SHOWN. SEE DETAIL 1 S6S7
2 S6S6
TOP OF CONCRETE
∠90x90x8 PIPE RISER SUPPORTS
TS 75x75x6 EA CORNER
TS 200x100x6 EA SIDE
∠90x90x8 VERTICALS-TYP
40ϕ STEEL PIPE RISER-TYP
∠90x90x8 HORIZ-TYP
DRUM ASSEMBLY SEE DETAIL 4 S6S7
200
EQUAL
EQUAL
EQUAL
2 800
1 S2S6 SKIMMER FRAME & ASSEMBLY
NTS
S3,
300
20mm ℄
300
TYP, GRIND SMOOTH
HOLE TO BE DETERMINED BY CAST IRON WHEEL ASSEMBLY MANUF.
TS 75x75x6
3 S6S6 DETAIL
NTS
FOR DIA. OF HOLE, CHECK W/ CAST IRON WHEEL ASSEMBLY MANUFACTURE
3 S6S6
300
℄ 20x280x280
6
TS 75x75x6 4 SIDES
TS 75x75x6, EA CORNER
∠75x75x6 ALL 4 SIDES
900
2 S6S7
5 TYP
TOP OF WALL
TOP OF WALL
5 TYP
200
5
6mm CLOSURE ℄
TS 200x100x6
5
5
5
TS 75x75x6
℄ 12x150x250
2-20ϕ EXPANSION BOLTS, 150 GAGE
∠90x90x8 TYP
CONC. WALL
EQUAL
EQUAL
EQUAL
2 800
5
5 S6S6
FACE OF WALL
900 CLR
12
90
2 S6S6 SKIMMER FRAME
NTS
125
5
∠90x90x8
40ϕ STEEL PIPE RISER
5
4 S6S6 DRUM GUIDE DETAIL
NTS
2-20ϕ EXPANSION BOLTS, 150 MIN GAGE
FACE OF CONC WALL
12
90
2-20ϕ BOLTS
∠130x90x8x250 LONG-TYP
∠90x90x8 VERTICALS-TYP
5 S6S6 FRAME ANCHOR DETAIL
NTS
ALL DIMENSIONS ARE IN MILLIMETERS (mm.) UNLESS OTHERWISE NOTED.
The Contractor will be responsible for coordinating the work among the various trades as necessary to avoid conflicts and to insure the installation of all work within the available space.
IF SHEET IS LESS THAN (22" X 34") IT IS A REDUCED PRINT - SCALE REDUCED ACCORDINGLY
PETER HIS ASSOCIATES, INC.
DEPARTMENT OF THE NAVY
NAVAL FACILITIES ENGINEERING COMMAND
PACIFIC DIVISION
MAKALAPA, HAWAII
GK
VH
EL
GK
EL
PRESIDENT
FY88 MCAF 8128
FIRE TRAINING FACILITY
Skimmer Frame Details
D
80081
7908941
N62766-82-C-02
41-82-0203
22
5-6

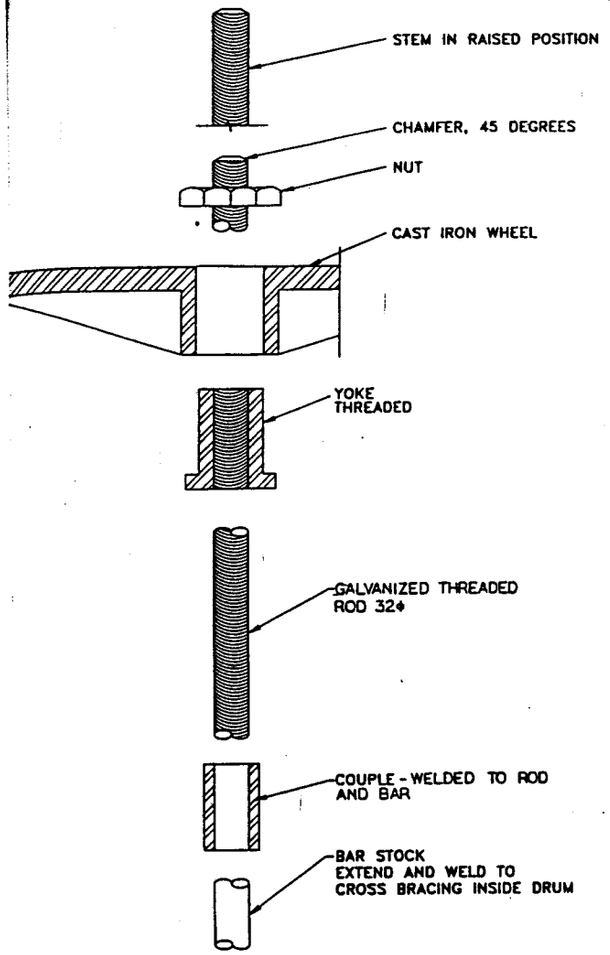

NOTE:
THE CONTRACTOR SHALL PROVIDE COMPLETE ASSEMBLY INCLUDING THE TURNING WHEEL AND SHALL BE SUPPORTED ON THE STRUCTURAL SYSTEM. WHEN COMPLETE, THE SKIMMER SHALL HAVE VERT. TRAVEL BY ROTATING TURNING WHEEL. THE TURNING WHEEL ELEVATION SHALL REMAIN UNCHANGED.

1 S6 S7 LIFTING WHEEL ASSEMBLY
NTS

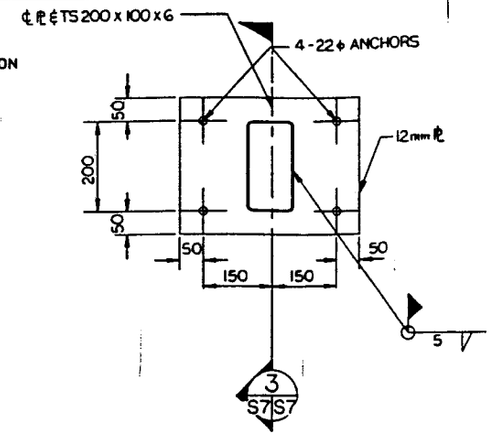

2 S6 S7 DETAIL (TYP 2 LOCATIONS)
NTS

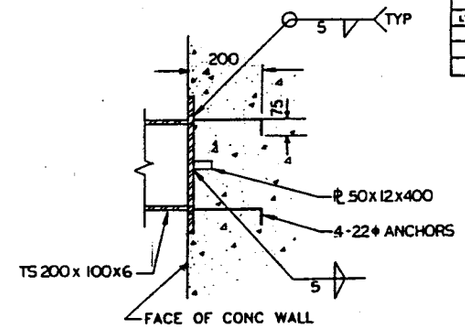

3 S7 S7 SKIMMER FRAME ANCHOR DETAIL
NTS

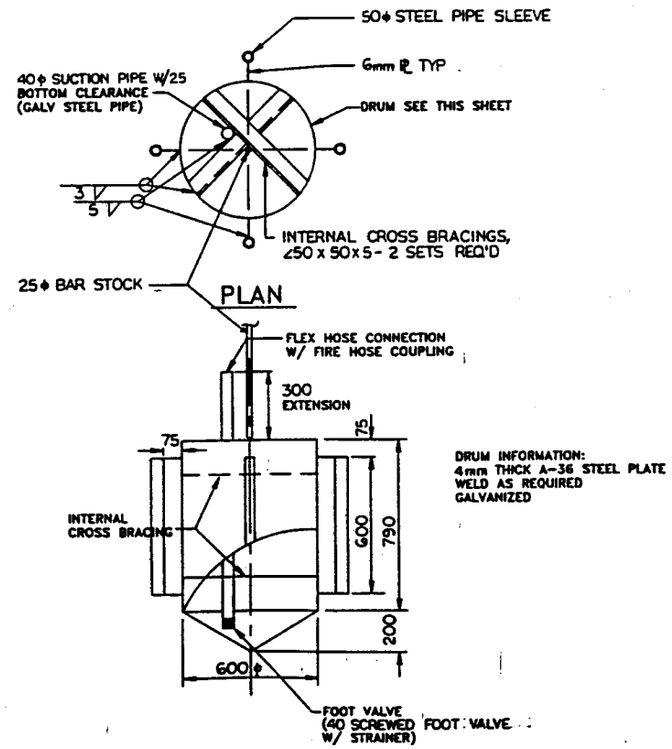

DRUM INFORMATION:
4mm THICK A-36 STEEL PLATE
WELD AS REQUIRED
GALVANIZED

4 S6 S7 DRUM DETAIL
NTS

REVISIONS				
LTR	DESCRIPTION	PREP'D BY	DATE	APPROVED

ALL DIMENSIONS ARE IN MILLIMETERS (mm.) UNLESS OTHERWISE NOTED.

IF SHEET IS LESS THAN (22" X 34") IT IS A REDUCED PRINT – SCALE REDUCED ACCORDINGLY

The Contractor will be responsible for coordinating the work among the various trades as necessary to avoid conflicts and to insure the installation of all work within the available space.

PETER NIE ASSOCIATES, INC.
ARCHITECTS-PLANNERS-ENGINEERS

DEPARTMENT OF THE NAVY NAVAL FACILITIES ENGINEERING COMMAND
PACIFIC DIVISION
MAKALAPA, HAWAII

DES GK | DR VH | CHK EL
DRFT GK | APP CHK EL
SUBMITTED BY PRESIDENT
FIRM CHECKED BY PRESIDENT
PROJECT MANAGER
APPROVED WILLIAM K. CHUY, CAPT, CEC, USN
FOR COMMANDER NAVFAC

ASSIGNED AFB
FY88 MCAF 2123
FIRE TRAINING FACILITY

Skimmer Details

SIZE D | CODE IDENT NO 80091 | NAVFAC DRAWING NO 7908942
CONTRACT NO N62766-82-C-0203
SCALE | SPEC 41-82-0203 | SHEET 23 OF 59

S-7

SATISFACTORY TO | DATE
TITLE

REVISIONS			
LTR	DESCRIPTION	PREP'D BY	DATE

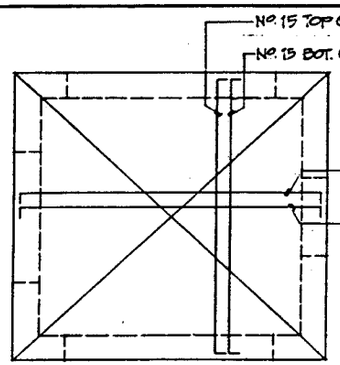

3 S8|S8 ROOF FRAMING PLAN
SCALE: 1:20

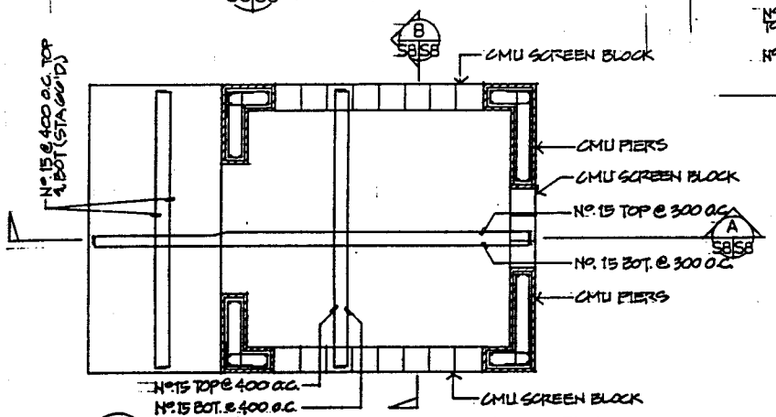

2 S8|S8 PLATFORM LEVEL FRAMING PLAN
SCALE: 1:20

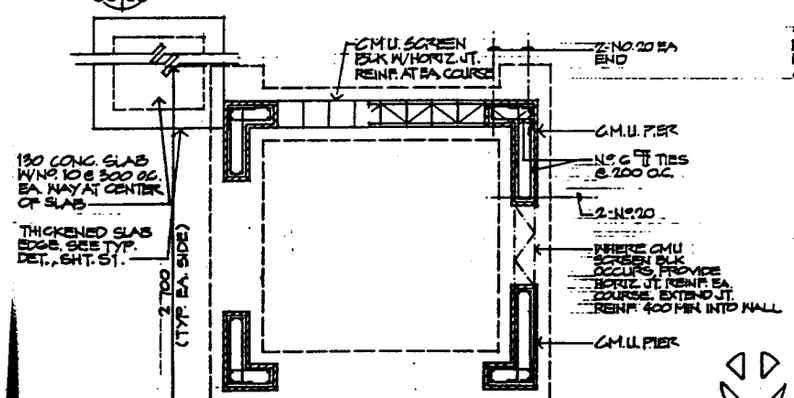

1 S8|S8 GROUND LEVEL & FOUNDATION PLAN
SCALE: 1:20

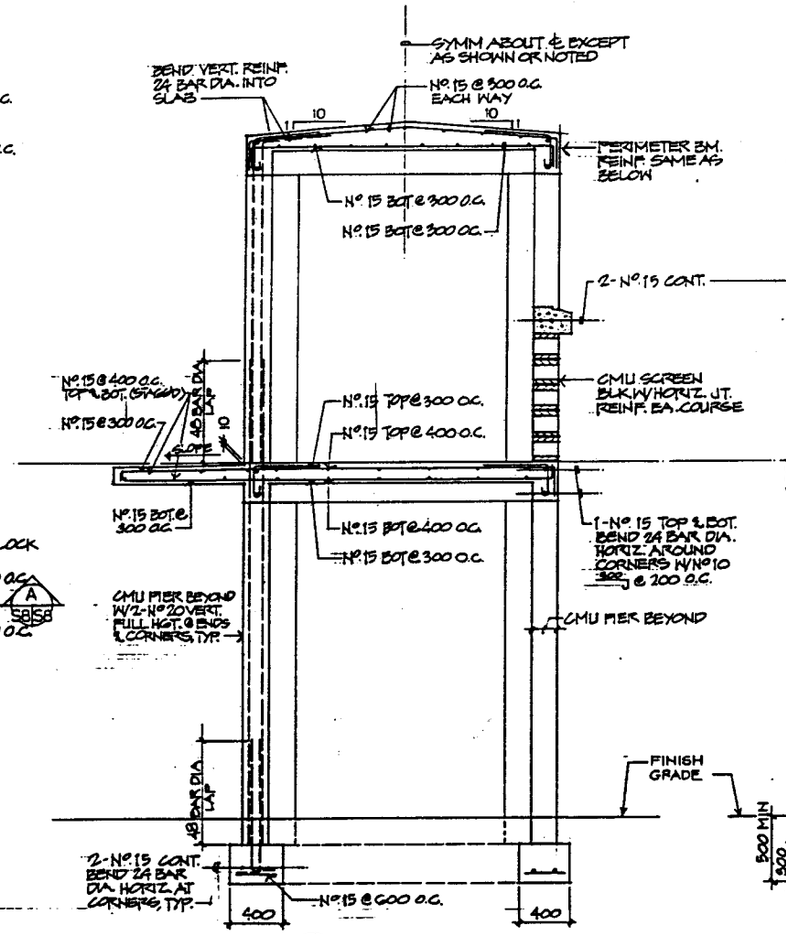

A S8|S8 SECTION
SCALE: 1:20

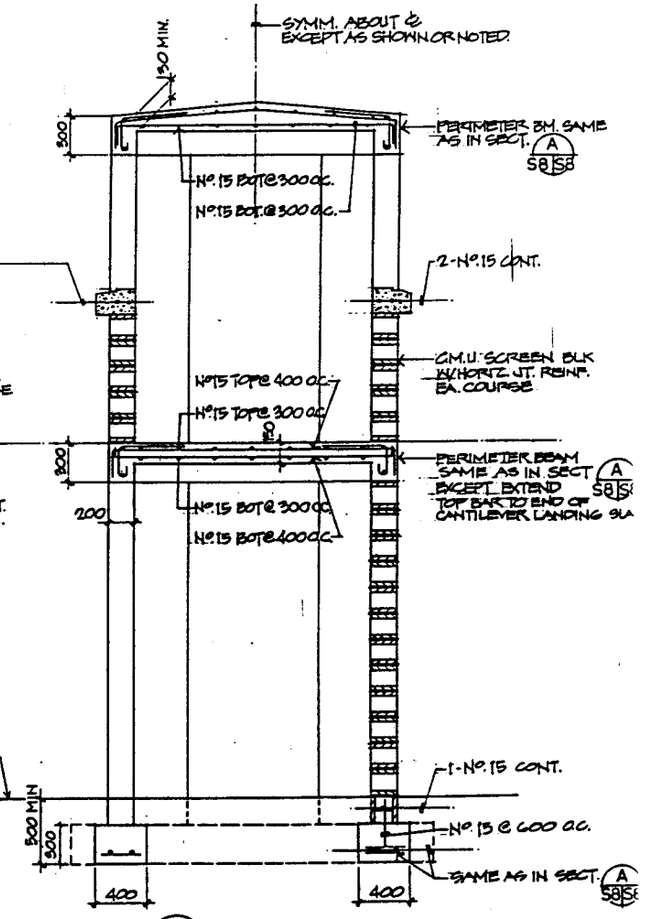

B S8|S8 SECTION
SCALE: 1:20

ALL DIMENSIONS ARE IN MILLIMETERS (mm) UNLESS OTHERWISE NOTED.

The Contractor will be responsible for coordinating the work among the various trades as necessary to avoid conflicts and to insure the installation of all work within the available space.

IF SHEET IS LESS THAN (36" X 24") IT IS A REDUCED PRINT - SCALE REDUCED ACCORDIN

GRAPHIC SCALE
1:20 0 1 2M

CONTROL/SAFETY STAND DETAILS

SCALE: 1:20 SEE CIVIL & MECH DWGS FOR LOCATION

S-8

PETER NIS ASSOCIATES, INC.
ARCHITECTS PLANNERS ENGINEERS

DEPARTMENT OF THE NAVY NAVAL FACILITIES ENGINEERING CO
PACIFIC DIVISION
MAKALAPA HAWAII

ARCHITECT AND FY88 MCAF FY89
FIRE TRAINING FACILITY

Control/Safety Stand Plans and Sectio

DRWN GK CKD BK APPD EL
SUBMITTED BY
FOR COMMANDER DATE

D 80001 7908943
SCALE DRWG 44-92-0203 SHEET 24 OF

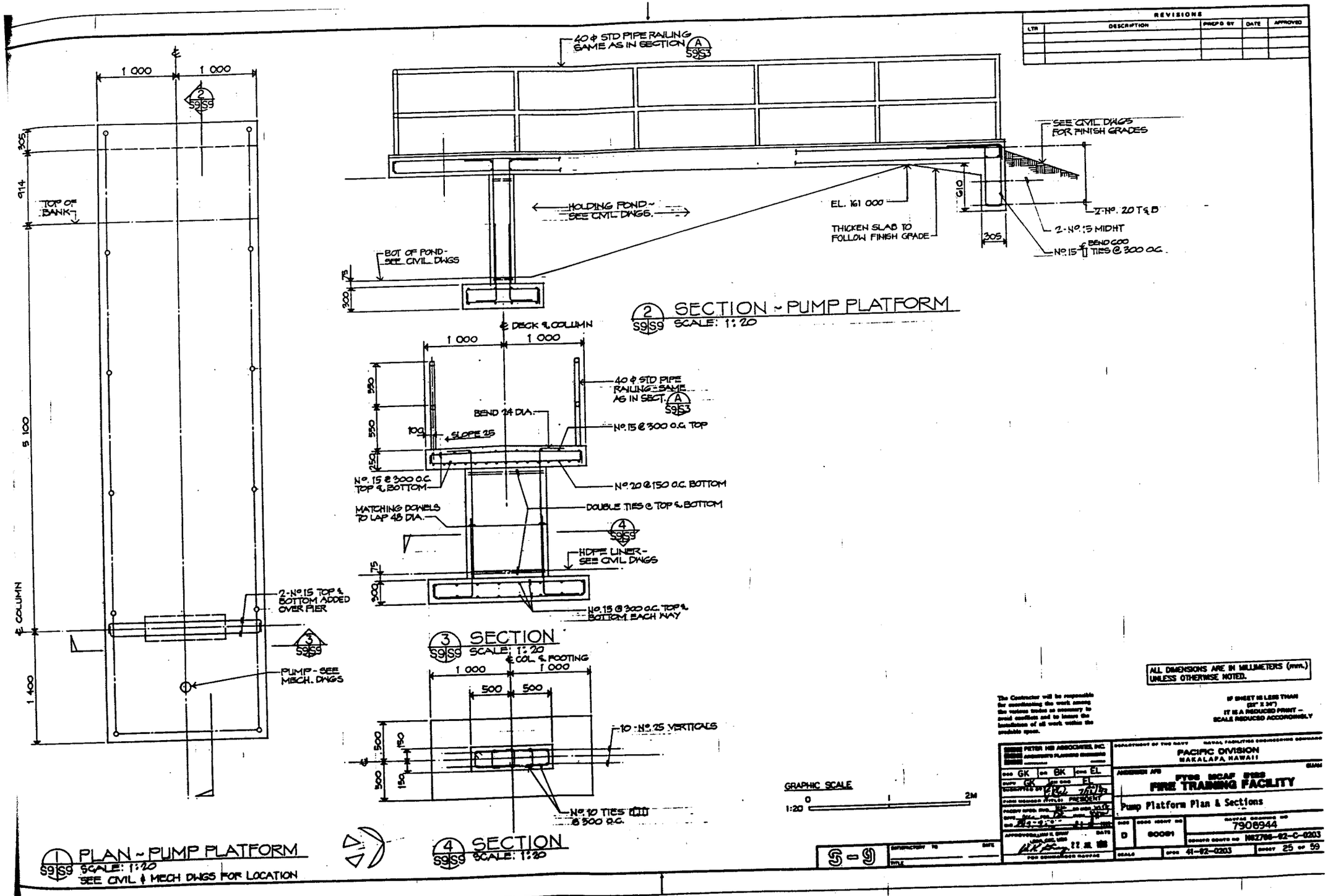

REVISIONS
LTR
DESCRIPTION
PREP'D BY
DATE
APPROVED
40 ϕ STD PIPE RAILING SAME AS IN SECTION A S9/S3
SEE CIVIL DWGS FOR FINISH GRADES
HOLDING POND - SEE CIVIL DWGS.
EL. 161 000
THICKEN SLAB TO FOLLOW FINISH GRADE
2-No. 20 T&B
2-No. 15 MIDHT
No. 15 BEND 600 TIES @ 300 O.C.
BOT OF POND - SEE CIVIL DWGS
2 S9/S9 SECTION - PUMP PLATFORM
SCALE: 1:20
℄ DECK & COLUMN
40 ϕ STD PIPE RAILING - SAME AS IN SECT. A S9/S3
BEND 24 DIA.
No. 15 @ 300 O.C. TOP
SLOPE 25
No. 15 @ 300 O.C. TOP & BOTTOM
No. 20 @ 150 O.C. BOTTOM
MATCHING DOWELS TO LAP 48 DIA.
DOUBLE TIES @ TOP & BOTTOM
HDPE LINER - SEE CIVIL DWGS
No. 15 @ 300 O.C. TOP & BOTTOM EACH WAY
3 S9/S9 SECTION
SCALE: 1:20
℄ COL. & FOOTING
10 - No. 25 VERTICALS
No. 10 TIES @ 300 O.C.
4 S9/S9 SECTION
SCALE: 1:20
TOP OF BANK
2-No. 15 TOP & BOTTOM ADDED OVER PIER
PUMP - SEE MECH. DWGS
℄ COLUMN
1 000
1 400
5 100
914
305
GRAPHIC SCALE
1:20
0
1
2M
1 PLAN - PUMP PLATFORM
S9/S9 SCALE: 1:20
SEE CIVIL & MECH DWGS FOR LOCATION
ALL DIMENSIONS ARE IN MILLIMETERS (mm.) UNLESS OTHERWISE NOTED.
The Contractor will be responsible for coordinating the work among the various trades as necessary to avoid conflicts and to insure the installation of all work within the available space.
IF SHEET IS LESS THAN (22" X 34") IT IS A REDUCED PRINT - SCALE REDUCED ACCORDINGLY
PETER HB ASSOCIATES, INC.
DEPARTMENT OF THE NAVY
NAVAL FACILITIES ENGINEERING COMMAND
PACIFIC DIVISION
MAKALAPA, HAWAII
FY86 MCAF 0183
FIRE TRAINING FACILITY
Pump Platform Plan & Sections
D
80081
7908944
N62766-82-C-0203
41-82-0203
25 of 59
S-9

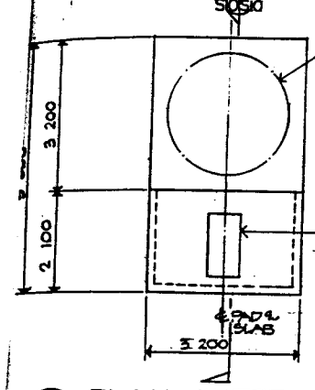

1 PLAN - WATER TANK PAD
S10 S10 SCALE: 1:50

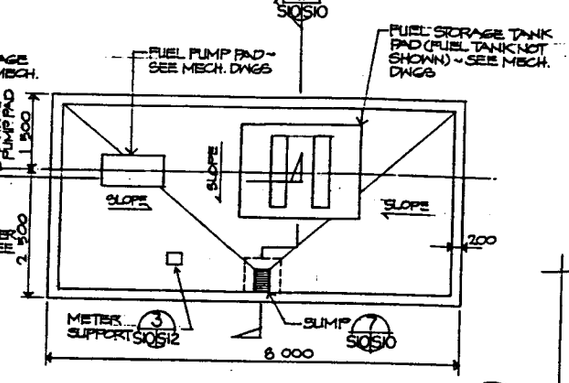

2 PLAN - FUEL TANK PAD
S10 S10 SCALE: 1:50

SEE CIVIL & MECH DWGS FOR LOCATION OF PADS

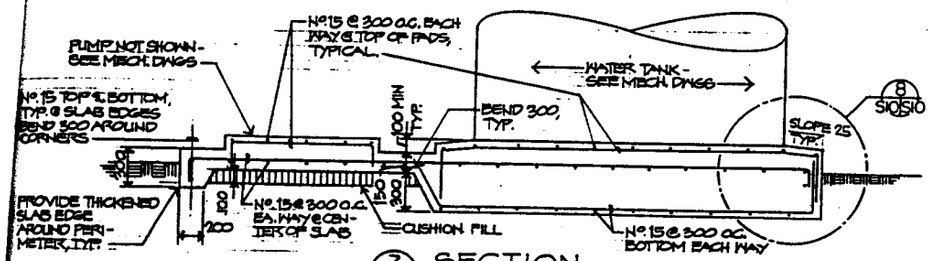

3 SECTION
S10 S10 SCALE: 1:20

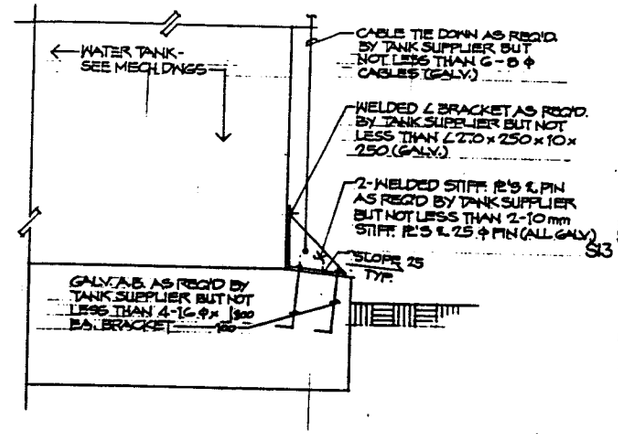

8 SECTION
S10 S10 SCALE: N.T.S.

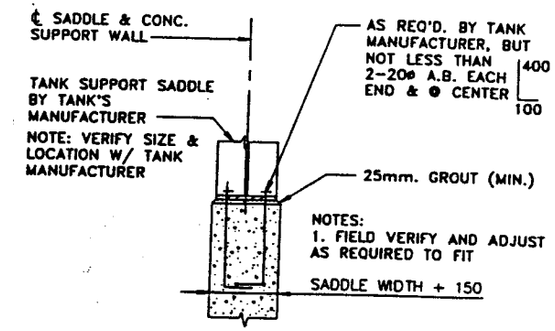

6 TYPICAL TANK SADDLE DETAIL
S10 S10 SCALE: NTS

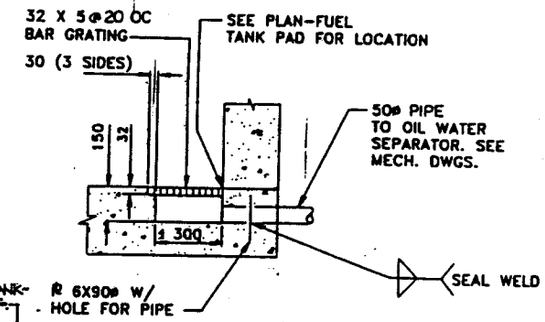

7 SECTION THRU SUMP
S10 S10 SCALE: NTS

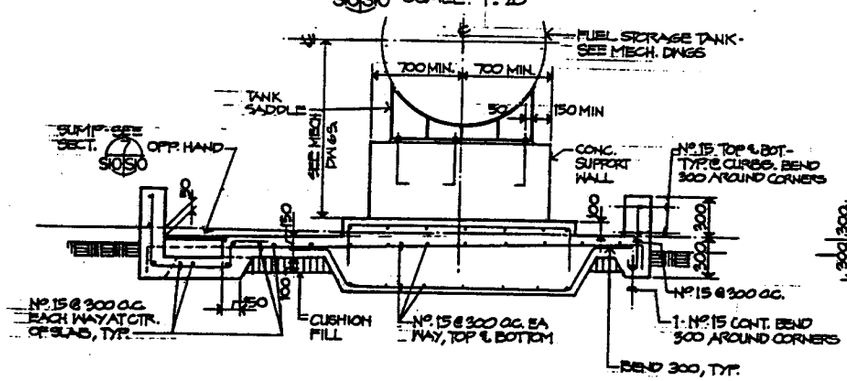

4 SECTION
S10 S10 SCALE: 1:20

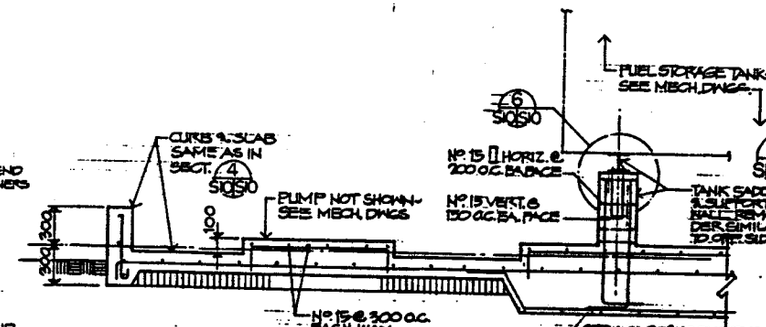

5 SECTION
S10 S10 SCALE: 1:20

GRAPHIC SCALES
1:20 0 1 2M
1:50 0 1 2 3 4 5M

NOTE:
DETAILS NOT NOTED OR SHOWN SAME AS IN SECT. 1 S10 S10

ALL DIMENSIONS ARE IN MILLIMETERS (mm.) UNLESS OTHERWISE NOTED.

IF SHEET IS LESS THAN (36" X 24") IT IS A REDUCED PRINT - SCALE REDUCED ACCORDINGLY

The Contractor will be responsible for coordinating the work among the various trades as necessary to avoid conflicts and to insure the installation of all work within the available space.

S-10

PETER MS ASSOCIATES INC.
ARCHITECTS PLANNERS ENGINEERS
DES GK DR BK CHKD EL
DATE GK DATE EL
SUBMITTED BY
PROJ ENGINEER PRESIDENT
PROJECT MANAGER
PROJECT ARCHITECT
APPROVED BY DATE
LEAD ARCH
FOR COMMANDING OFFICER

DEPARTMENT OF THE NAVY NAVAL FACILITIES ENGINEERING COMMAND
PACIFIC DIVISION
PEARL HARBOR HAWAII

ARCHITECT AND ENGINEER
FY90 MCAF PWD
FIRE TRAINING FACILITY
Water and Fuel Tank Pad Details

DWG D 80001
DRAWING NO 7908945
CONTR DRWG NO N62700-92-C-0203
SCALE
SPEC 41-92-0203
SHEET 26 OF 59

REVISIONS				
LTR	DESCRIPTION	PREP'D BY	DATE	APPROVED

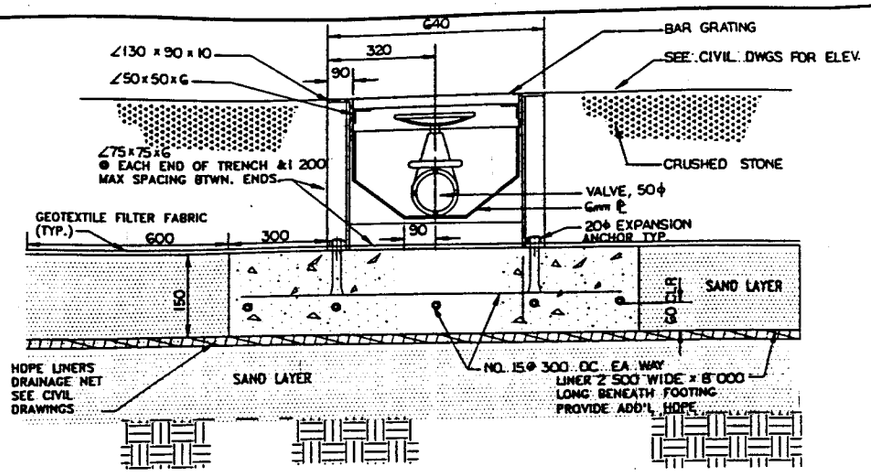

2 SECTION THRU WEIR
S11 S11 NTS

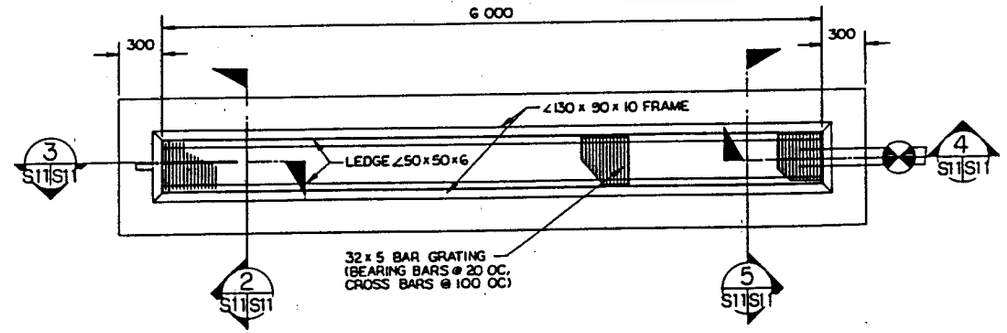

1 WEIR STRUCTURE , (OUTLET BOX PLAN)
S11 S11 NTS SEE CIVIL & MECH DWGS FOR LOCATION

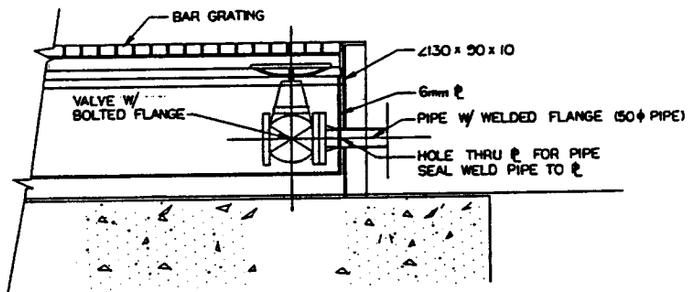

3 SECTION AT END OF WEIR
S11 S11 NTS

NOTE: VALVE SHALL BE PLACED AS LOW AS POSSIBLE WITHIN WEIR STRUCTURE.

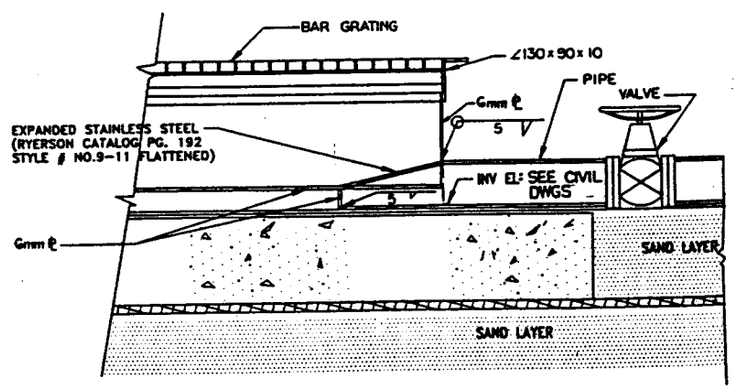

4 SECTION AT END OF WEIR
S11 S11 NTS

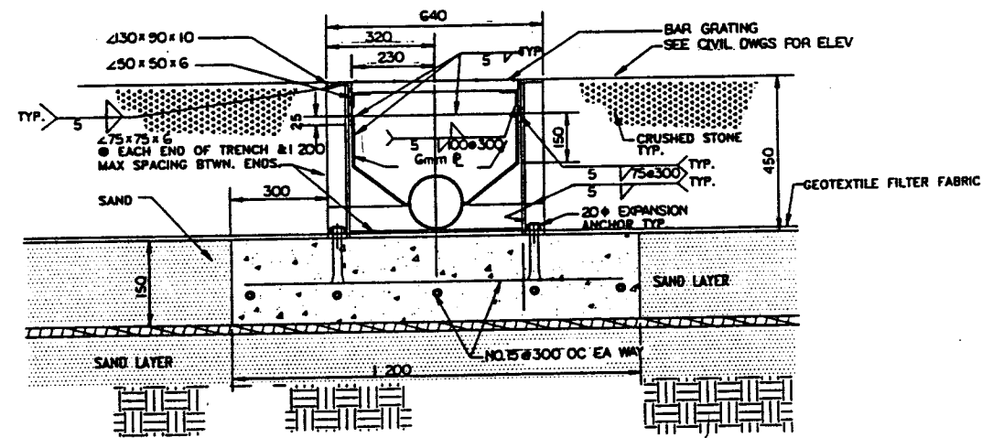

5 SECTION THRU WEIR
S11 S11 NTS

ALL DIMENSIONS ARE IN MILLIMETERS (mm.) UNLESS OTHERWISE NOTED.

The Contractor will be responsible for coordinating the work among the various trades as necessary to avoid conflicts and to insure the installation of all work within the available space.

IF SHEET IS LESS THAN (22" X 34") IT IS A REDUCED PRINT – SCALE REDUCED ACCORDINGLY

PETER HO ASSOCIATES INC.
ARCHITECTS PLANNERS ENGINEERS

DEPARTMENT OF THE NAVY NAVAL FACILITIES ENGINEERING COMMAND
PACIFIC DIVISION
MAKALAPA, HAWAII

GK VH EL
GK EL
PRESIDENT

FY88 MCAF 8123
FIRE TRAINING FACILITY

Weir Structure Plan & Details

D 60091 7908946
N62766-83-C-0203
41-82-0203 27 OF 59

S-11

REVISIONS				
LTR	DESCRIPTION	PREP'D BY	DATE	APPROVED

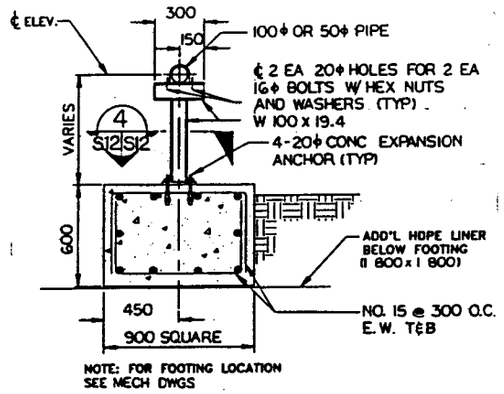

1 WATER & REBURN PIPE SUPPORT
S12S12 NTS

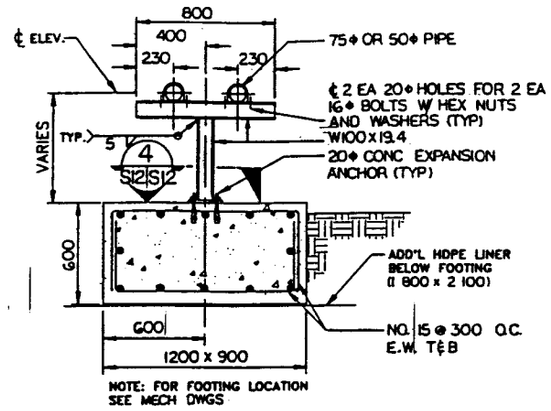

2 FUEL LINE SUPPORT
S12S12 NTS

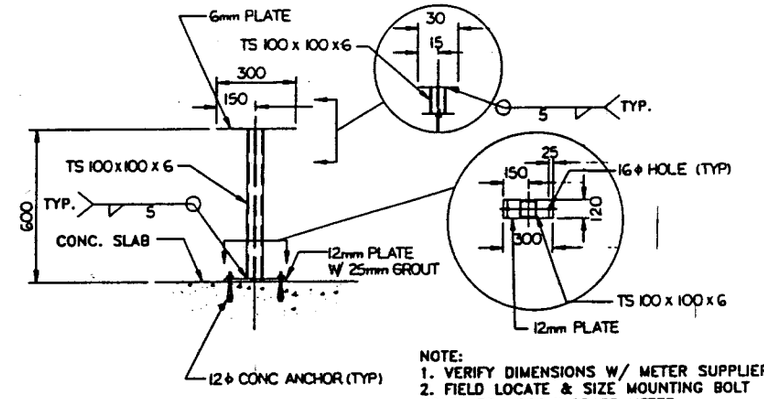

NOTE:
1. VERIFY DIMENSIONS W/ METER SUPPLIER.
2. FIELD LOCATE & SIZE MOUNTING BOLT HOLES TO ACCOMMODATE METER MOUNTING BRACKET.

3 METER SUPPORT
S10S12 NTS

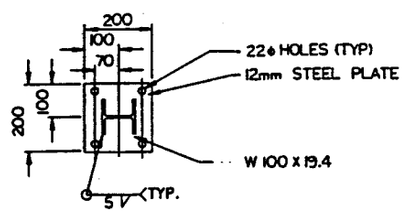

4 PLAN OF PIPE SUPPORT POST
S12S12 NTS

ALL DIMENSIONS ARE IN MILLIMETERS (mm.) UNLESS OTHERWISE NOTED.

The Contractor will be responsible for coordinating the work among the various trades as necessary to avoid conflicts and to insure the installation of all work within the available space.

IF SHEET IS LESS THAN (22" X 34") IT IS A REDUCED PRINT — SCALE REDUCED ACCORDINGLY

PETER HIS ASSOCIATES INC.
CONSULTING PLANNERS ENGINEERS

DEPARTMENT OF THE NAVY NAVAL FACILITIES ENGINEERING COMMAND
PACIFIC DIVISION
MAKALAPA, HAWAII

DWN GK CKD VH SPEC EL
SUBMITTED BY
FIELD ENGINEER PROJ. ENGINEER
APPROVED: ACDG. CIVIL ENG. DATE
FOR COMMANDING OFFICER

ARCHITECT AND ENGINEER
FY88 SCAP SYSS
FIRE TRAINING FACILITY

Miscellaneous Details

SIZE D
CODE IDENT NO 80091
CONTRACTOR DRAWING NO 7908947
CONTRACT CONTR NO N62786-82-C-0203
SCALE
SPEC 41-82-0203
SHEET 28 OF 59

S-12

SUBMITTED TO DATE
TITLE

REVISIONS				
LTR	DESCRIPTION	PREP'D BY	DATE	APPROVED

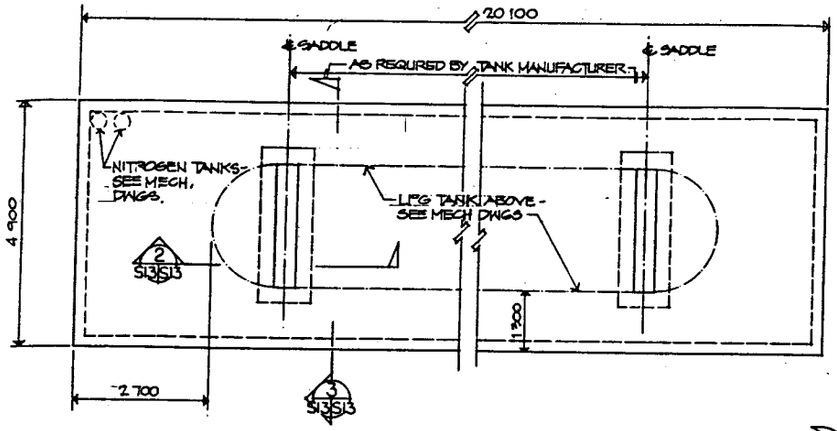

1 S13S13 LPG STORAGE TANK PAD PLAN
SCALE: 1:50 SEE CIVIL & MECH. DWGS FOR LOCATION.

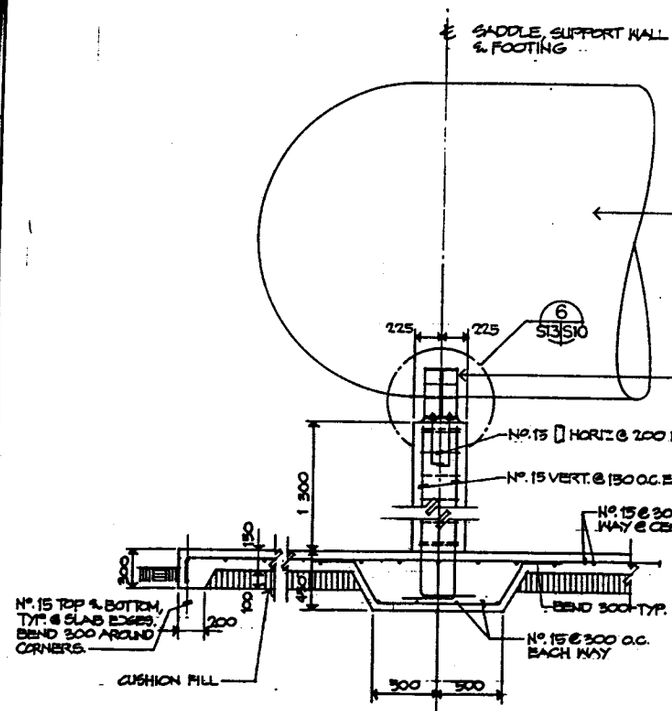

2 S13S13 SECTION
SCALE: 1:20

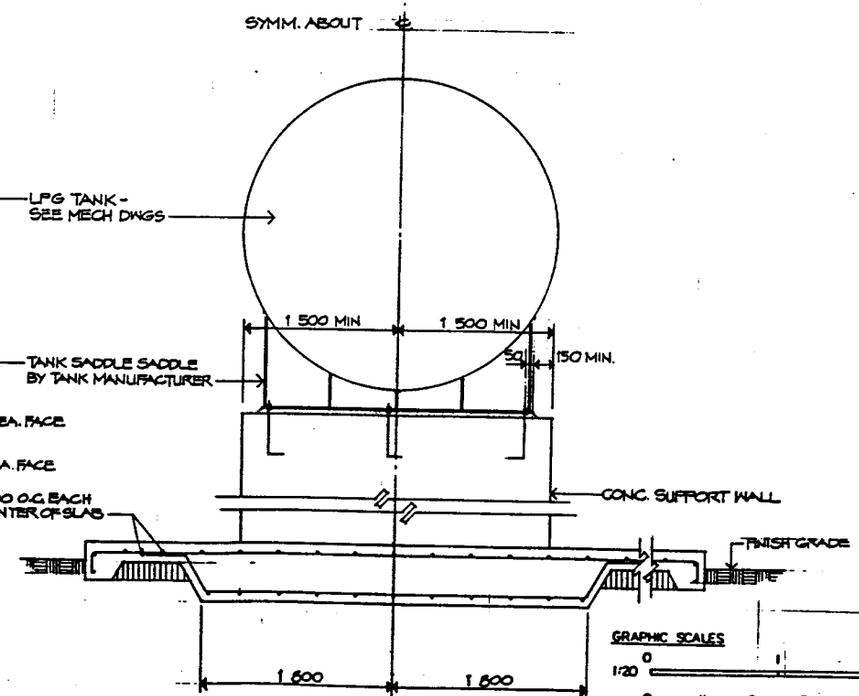

3 S13S13 SECTION
SCALE: 1:20

GRAPHIC SCALES
1:20 0 1 2M
1:50 0 1 2 3 4 5M

ALL DIMENSIONS ARE IN MILLIMETERS (mm.) UNLESS OTHERWISE NOTED.

IF SHEET IS LESS THAN (22" X 34") IT IS A REDUCED PRINT – SCALE REDUCED ACCORDINGLY

The Contractor will be responsible for coordinating the work among the various trades as necessary to avoid conflicts and to insure the installation of all work within the available space.

PETER HIS ASSOCIATES, INC. ARCHITECTS PLANNERS ENGINEERS
DRN GK CHK BK DES EL
SUBMITTED BY PRESIDENT
APPROVED BY CAPT. USN DATE 22 JUL 1983
FOR COMMANDER NAVFAC

DEPARTMENT OF THE NAVY NAVAL FACILITIES ENGINEERING COMMAND
PACIFIC DIVISION
MAKALAPA HAWAII

ANNAPOLIS MD UNAN
FY88 MCAF 8128
FIRE TRAINING FACILITY

LPG Storage Tank Pad Plan & Sections

CODE IDENT NO D 80091
DRAWING NUMBER NO 7906948
CONTRACT NO N62766-82-C-0203
SCALE SPEC 41-82-0203 SHEET 29 OF 59

S-13

SATISFACTORY TO DATE
TITLE

REVISIONS				
LTR	DESCRIPTION	PREPD BY	DATE	APPROVED

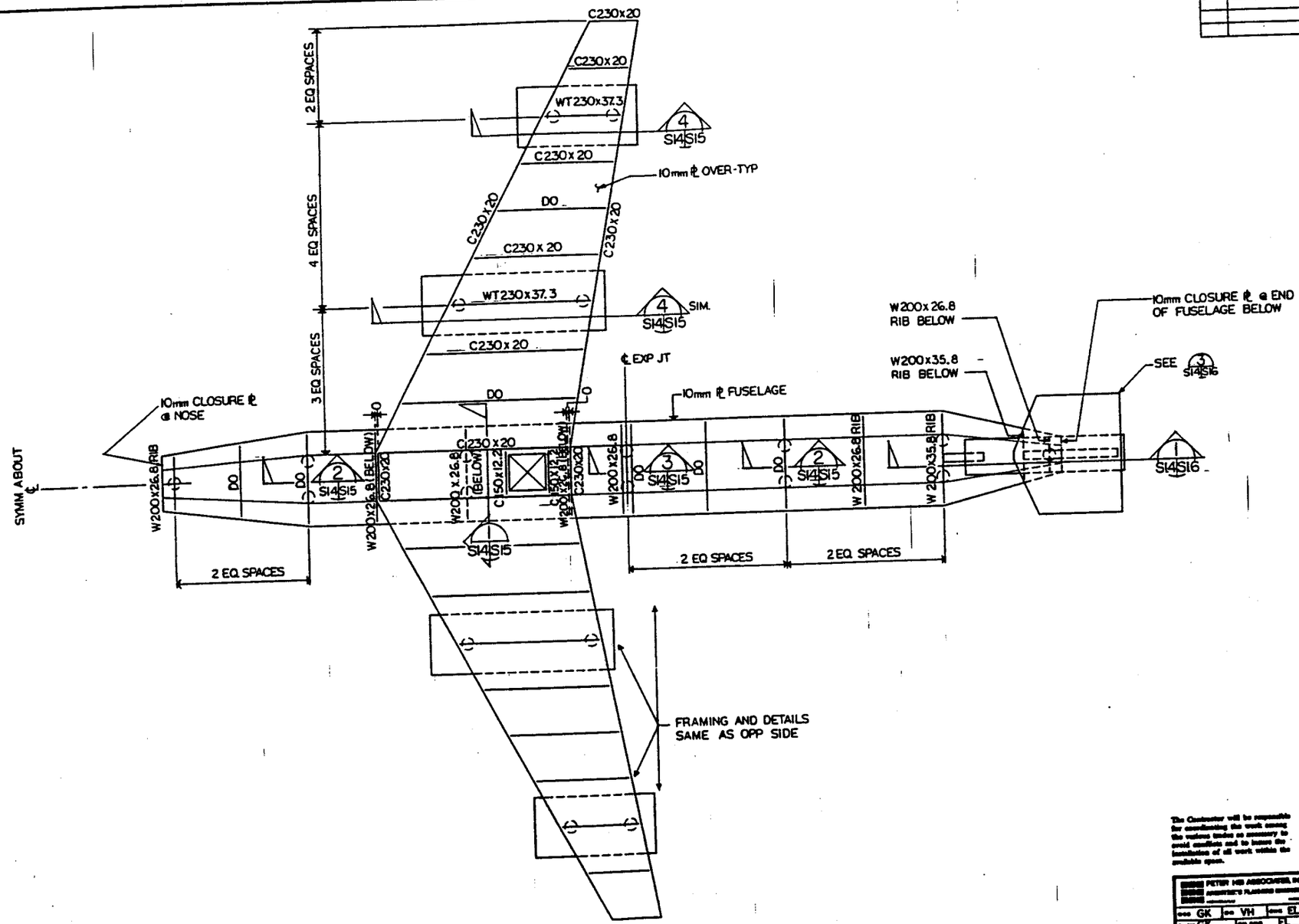

1 AIRCRAFT MOCK-UP FRAMING PLAN
S14 S14 SCALE: 1:50 SEE CIVIL DWGS FOR LOCATION & ORIENTATION

GRAPHIC SCALE
1:50 0 1 2 3 4 5 6M

ALL DIMENSIONS ARE IN MILLIMETERS (mm.) UNLESS OTHERWISE NOTED.

IF SHEET IS LESS THAN (22" X 34") IT IS A REDUCED PRINT — SCALE REDUCED ACCORDINGLY

The Contractor will be responsible for coordinating the work among the various trades as necessary to avoid conflicts and to insure the installation of all work within the available space.

PETER HB ASSOCIATES, INC.
ARCHITECT'S PLANNING ENGINEERS

DRN GK DES VH CHK EL
SUPV GK APP EL
PRINCIPAL PRESIDENT
APPROVED NAVAL CIVIL ENG DATE
FOR CONSTRUCTION PURPOSES

DEPARTMENT OF THE NAVY NAVAL FACILITIES ENGINEERING COMMAND
PACIFIC DIVISION
MAKALAPA, HAWAII

ARCHIVES AFB FY88 MCAF FY89 GUAM
FIRE TRAINING FACILITY

Aircraft Mock-Up Framing Plan

SIZE D CODE IDENT NO 80091 DRAWING NO 7908949
SCALE SPEC 41-02-0203 SHEET 30 OF 59

S-14

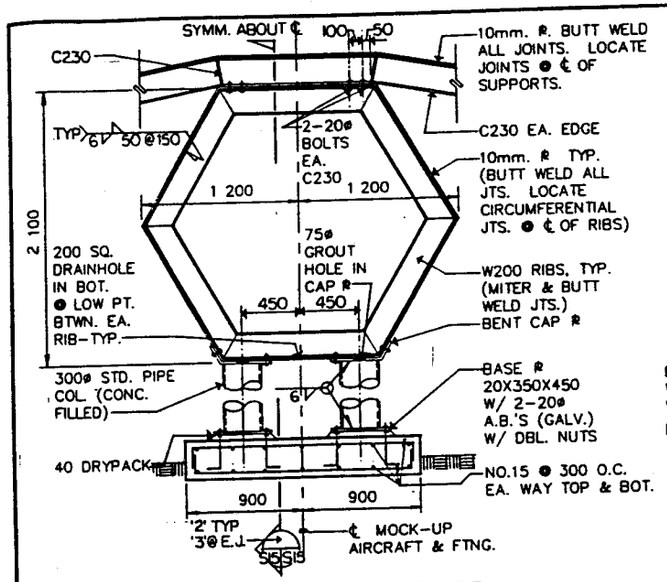

1 SECTION THRU FUSELAGE
S14 S5S5S5 SCALE: 1:20

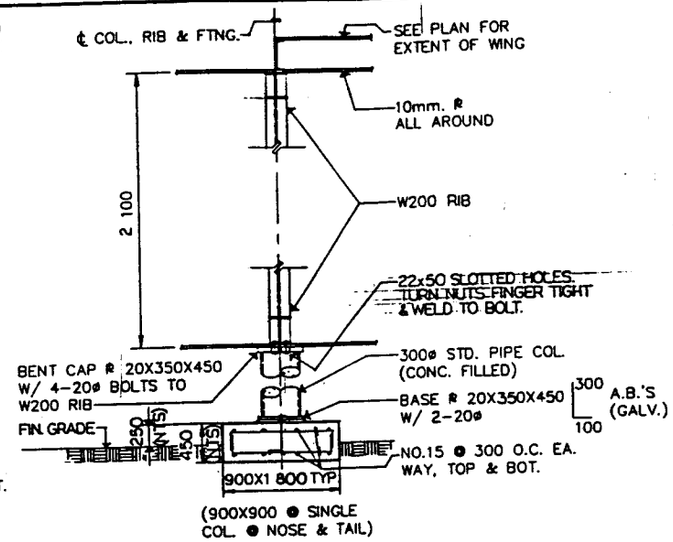

2 SECTION
S14 S5S5S5 SCALE: 1:20

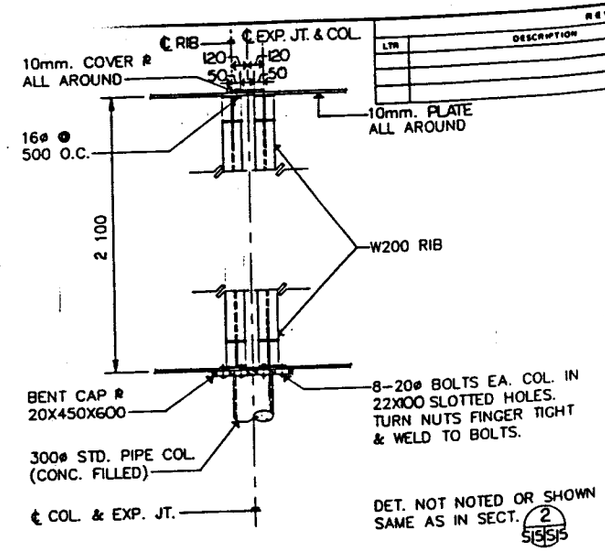

3 SECTION
S14 S5S5S5 SCALE: 1:20

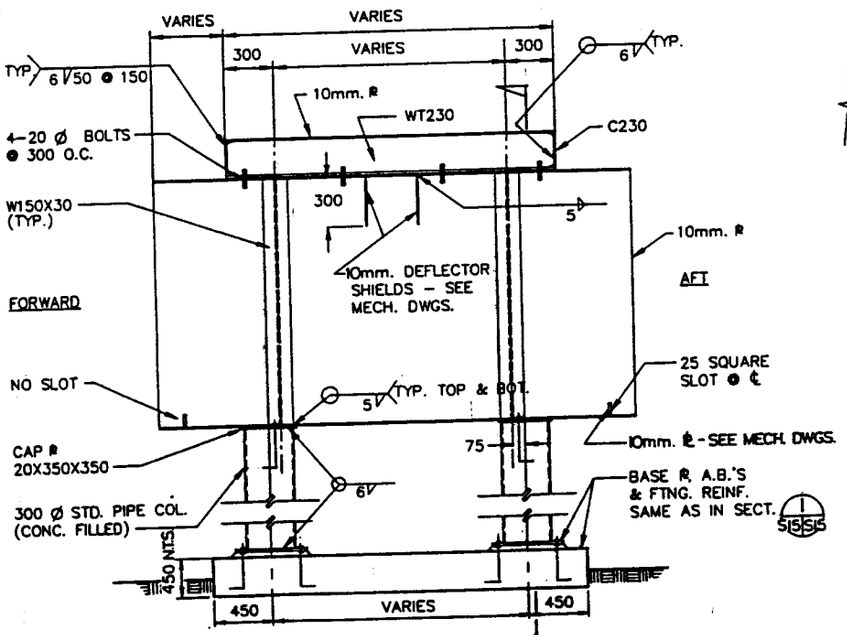

4 SECTION THRU ENGINE
S14 S5S5 SCALE: 1:20

5 S5S5

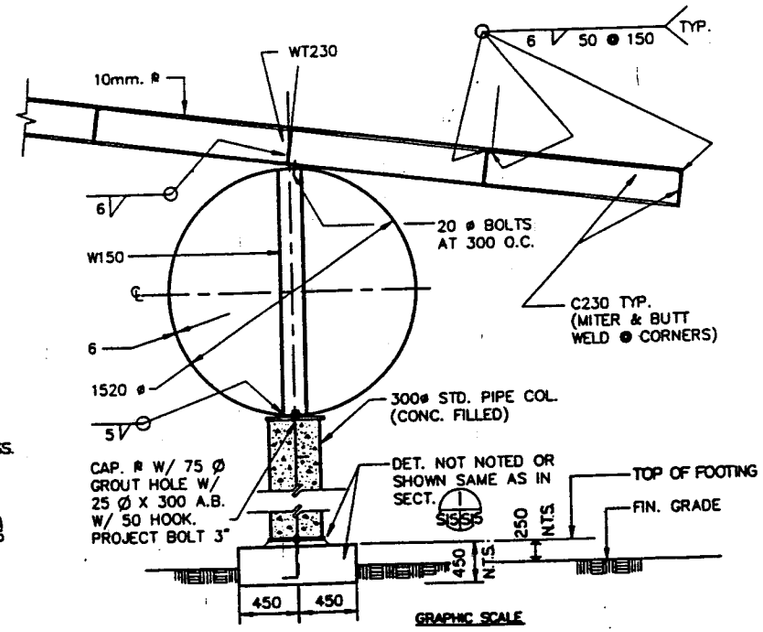

5 SECTION THRU ENGINE
S5S5S5 SCALE: 1:20

GRAPHIC SCALE
1:20 0 1 2M

ALL DIMENSIONS ARE IN MILLIMETERS (mm.) UNLESS OTHERWISE NOTED.

IF SHEET IS LESS THAN (22" X 34") IT IS A REDUCED PRINT - SCALE REDUCED ACCORDINGLY

The Contractor will be responsible for coordinating the work among the various trades as necessary to avoid conflicts and to insure the installation of all work within the available space.

REVISIONS

LTR	DESCRIPTION	PREPD BY	DATE	APPROVED

PETER HIS ASSOCIATES, INC.
ARCHITECTS-ENGINEERS-PLANNERS

DEPARTMENT OF THE NAVY NAVAL FACILITIES ENGINEERING COMMAND
PACIFIC DIVISION
PEARL HARBOR, HAWAII

ANDERSEN AFB GUAM
FY86 MCAP SIZE
FIRE TRAINING FACILITY

Aircraft Mock-Up Details

DRAWN GK CHKD VH DES EL
SUBMITTED BY RD
PROJ ENGR
PROJ ARCH
APPROVED

DATE 11-22-85

DWG NO 7908950
CONTR NO N62766-82-C-0203
SHEET 31 OF 59
SCALE
SPEC 41-82-0203
D 80061

S-15

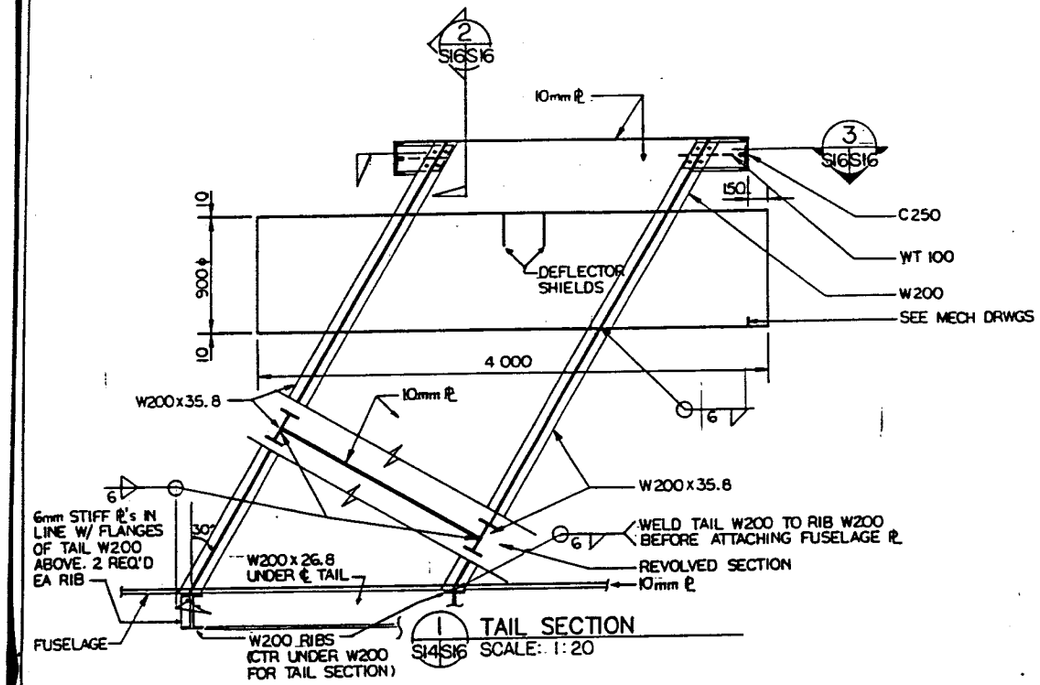

1 TAIL SECTION
S14 S16 SCALE: 1:20

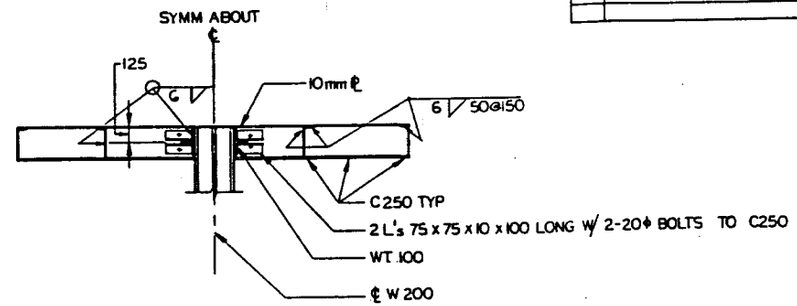

2 TAIL SECTION
S16 S16 SCALE: 1:20

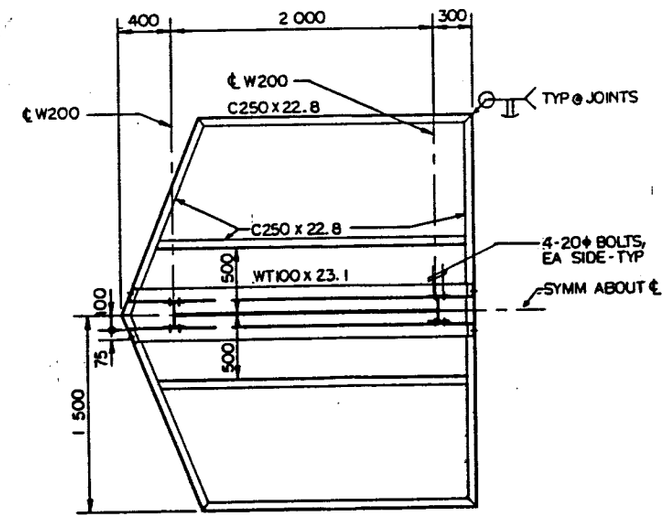

3 TAIL SECTION
S16 S16 SCALE: 1:20
S14

ALL DIMENSIONS ARE IN MILLIMETERS (mm.) UNLESS OTHERWISE NOTED.

The Contractor will be responsible for coordinating the work among the various trades as necessary to avoid conflicts and to insure the installation of all work within the available space.

IF SHEET IS LESS THAN (22" X 34") IT IS A REDUCED PRINT — SCALE REDUCED ACCORDINGLY

GRAPHIC SCALE
1:20 0 1 2M

S-16

PETER HIS ASSOCIATES, INC.

DEPARTMENT OF THE NAVY NAVAL FACILITIES ENGINEERING COMMAND
PACIFIC DIVISION
MAKALAPA, HAWAII

ANDERSEN AFB GUAM
FY86 MCAF 8123
FIRE TRAINING FACILITY

Aircraft Mock-Up Details

D 80081 7908951
N62706-82-C-0203
41-82-0203 SHEET 38 OF 59